RCA No. 489 1st Revised Sheet No. Title

Cancelling

Original Sheet No. Title

RECEIVED

APR 13 2001

State of Alaska
Regulatory Commission of Alaska

GCI COMMUNICATION CORP.

ACCESS SERVICES

Regulations, Rates and Charges
applying to the provision of Access Service
for connection to intrastate communications
facilities for Intrastate Customers within
the operating territory of
the following issuing carriers:

GCI Communication Corp.

In the state of Alaska

as provided herein.

All material contained herein is new except as otherwise indicated.

(D)
(D)

Tariff Advice No. 90 Effective: April 16, 2001

Issued by: GCI Communication Corp.

By: Title: Director, Rates & Tariffs

RCA No. 489 8th Revised Sheet No. 1

Canceling

7th Revised Sheet No. 1

RECEIVED
JUN 29 2022
STATE OF ALASKA
REGULATORY COMMISSION OF ALASKA

GCI COMMUNICATION CORP.

ACCESS SERVICES
Check Sheet

Original and revised pages as names below contain all changes from the original tariff that are in effect on the date hereof.

Page	Revised	Eff. Date	Page	Revised	Eff. Date	Page	Revised	Eff. Date
Title	1st	04/16/01	26	Original	02/04/97	51	2nd	04/24/07
1*	**8th**	**07/01/22**	27	Original	02/04/97	51.1	Original	12/12/04
2	2nd	07/01/21	28	1st	07/01/21	52	Original	02/04/97
3*	**7th**	**07/01/22**	29	Original	02/04/97	53	Original	02/04/97
3.1*	**3rd**	**07/01/22**	30	1st	01/01/19	54	2nd	02/16/07
3.2*	**1st**	**07/01/22**	31	Original	02/04/97	55	Original	02/04/97
4	1st	01/01/99	32	Original	02/04/97	56	Original	02/04/97
5	Original	02/04/97	33	Original	02/04/97	57	1st	04/24/07
6	Original	02/04/97	34	Original	02/04/97	58	1st	07/01/21
7	Original	02/04/97	35	Original	02/04/97	59	Original	02/04/97
8	Original	02/04/97	36	Original	02/04/97	60	Original	02/04/97
9	2nd	04/19/01	37	Original	02/04/97	61	Original	02/04/97
9.1	1st	02/16/07	38	1st	10/01/02	62	2nd	02/16/07
9.2	2nd	10/01/07	39	13th	07/19/10	63	Original	02/04/97
9.3	Original	10/01/07	39.1	Original	02/16/07	64	2nd	02/16/07
9.4	2nd	11/21/08	40	Original	02/04/97	65	2nd	02/16/07
9.5	2nd	07/01/13	41	Original	02/04/97	65.1	Original	02/16/07
9.6	2nd	07/01/13	42	Original	02/04/97	66	2nd	02/16/07
10	Original	02/04/97	43	4th	08/08/07	67	Original	02/04/97
11	Original	02/04/97	43.01	3rd	09/10/10	68	2nd	02/16/07
12	Original	02/04/97	43.1	Original	02/16/07	69	3rd	07/01/21
13	Original	02/04/97	44	Original	02/04/97	70	2nd	07/01/21
14	Original	02/04/97	45	Original	02/04/97	71	1st	08/01/11
15	1st	04/16/01	46	Original	02/04/97	72	Original	02/04/97
16	Original	02/04/97	47	Original	02/04/97	73	1st	09/04/09
17	Original	02/04/97	48	Original	02/04/97	73.1	1st	07/01/21
18	Original	02/04/97	49	Original	02/04/97	74	3rd	07/01/21
19	Original	02/04/97	50	3rd	01/01/19	75	3rd	07/01/21
20	Original	02/04/97	50.1	3rd	08/01/11	76	2nd	04/24/07
21	Original	02/04/97	50.2	3rd	01/01/19	77	3rd	07/01/21
22	Original	02/04/97	50.3	12th	01/01/19	78	Original	02/04/97
23	Original	02/04/97	50.4	4th	01/01/19	79	Original	02/04/97
24	Original	02/04/97	50.5	3rd	08/01/11	80	Original	02/04/97
25	Original	02/04/97	50.6	1st	08/01/11	81	Original	02/04/97

Tariff Advice No. TA 597-489 Effective: July 1, 2022

Issued by: GCI Communication Corp.

By: Karen Crapps Title: Director, Regulatory Affairs

RCA No. 489 2nd Revised Sheet No. 2

Canceling

1st Revised Sheet No. 2

INFORMATIONAL FILING ONLY

RECEIVED 06/24/21

GCI COMMUNICATION CORP.

ACCESS SERVICES
Check Sheet

Original and revised pages as names below contain all changes from the original tariff that are in effect on the date hereof.

Page	Revised	Eff. Date	Page	Revised	Eff. Date	Page	Revised	Eff. Date
82	Original	02/04/97	114	Original	02/04/97	146	2nd	02/16/07
83	Original	02/04/97	115	Original	02/04/97	147	2nd	02/16/07
84	Original	02/04/97	116	Original	02/04/97	148	Original	02/04/97
85	Original	02/04/97	117	Original	02/04/97	149	Original	02/04/97
86	Original	02/04/97	**118***	**1st**	**07/01/21**	150	Original	02/04/97
87*	**1st**	**07/01/21**	**119***	**3rd**	**07/01/21**	151	2nd	02/16/07
88*	**1st**	**07/01/21**	120	Original	02/04/97	152	Original	02/04/97
89	Original	02/04/97	121	Original	02/04/97	153	Original	02/04/97
90	Original	02/04/97	121	Original	02/04/97	154	Original	02/04/97
91	Original	02/04/97	123	Original	02/04/97	155	Original	02/04/97
92	Original	02/04/97	124	Original	02/04/97	156	Original	02/04/97
93	Original	02/04/97	125	Original	02/04/97	157	2nd	02/16/07
94	Original	02/04/97	126	Original	02/04/97	158	Original	02/04/97
95	Original	02/04/97	127	Original	02/04/97	159	Original	02/04/97
96	2nd	02/16/07	128	Original	02/04/97	160	Original	02/04/97
97	Original	02/04/97	129	Original	02/04/97	161	Original	02/04/97
98	Original	02/04/97	130	Original	02/04/97	162	Original	02/04/97
99	Original	02/04/97	131	1st	09/04/09	163	Original	02/04/97
100	2nd	04/24/07	132	Original	02/04/97	164	Original	02/04/97
101	3rd	04/24/07	133	Original	02/04/97	165	2nd	04/24/07
102	2nd	04/24/07	134	Original	02/04/97	165.1	1st	04/24/07
103	2nd	04/24/07	135	Original	02/04/97	166	3rd	04/24/07
104	2nd	04/24/07	136	Original	02/04/97	167	Original	02/04/97
105	2nd	04/24/07	137	Original	02/04/97	168	Original	02/04/97
106	2nd	04/24/07	138	2nd	02/16/07	169	2nd	04/24/07
107	Original	02/04/97	139	Original	02/04/97	170	1st	10/01/02
108*	**3rd**	**07/01/21**	140	Original	02/04/97	170.1	1st	04/24/07
109*	**1st**	**07/01/21**	141	1st	08/01/11	171	2nd	04/24/07
110	Original	02/04/97	142	Original	02/04/97	172	Original	02/04/97
111	Original	02/04/97	143	Original	02/04/97	173	Original	02/04/97
112	Original	02/04/97	144	Original	02/04/97	174	Original	02/04/97
113	Original	02/04/97	145	Original	02/04/97	175	Original	02/04/97

Tariff Advice No. TA596-489 Effective: July 1, 2021

Issued by: GCI Communication Corp.

By: Karen Crapps Title: Director, Regulatory Affairs

RCA No. 489 7th Revised Sheet No. 3

Canceling

6th Revised Sheet No. 3

RECEIVED
JUN 29 2022
STATE OF ALASKA
REGULATORY COMMISSION OF ALASKA

GCI COMMUNICATION CORP.

ACCESS SERVICES
Check Sheet

Original and revised pages as names below contain all changes from the original tariff that are in effect on the date hereof.

Page	Revised	Eff. Date	Page	Revised	Eff. Date	Page	Revised	Eff. Date
176	Original	02/04/97	210	Original	02/04/97	239	Original	04/19/01
177	Original	02/04/97	211	Original	02/04/97	240	10th	01/01/19
178	Original	02/04/97	212	Original	02/04/97	241	7th	07/01/17
179	Original	02/04/97	213	Original	02/04/97	**241.1***	**8th**	**07/01/22**
180	Original	02/04/97	214	Original	02/04/97	**242***	**4th**	**07/01/22**
181	Original	02/04/97	215	Original	02/04/97	243	1st	10/01/02
182	Original	02/04/97	216	Original	02/04/97	244	3rd	07/25/11
183	Original	02/04/97	216.1	8th	09/01/19	244.1	Original	10/01/02
184	Original	02/04/97	217	9th	07/01/17	245	1st	10/01/02
185	Original	02/04/97	**217.1***	**9th**	**07/01/22**	245.1	Original	10/01/02
186	Original	02/04/97	**218**	**5th**	**07/01/22**	246	1st	10/01/02
187	Original	02/04/97	219	2nd	08/13/04	247	3rd	07/25/11
188	Original	02/04/97	220	4th	07/25/11	247.1	1st	08/09/03
189	Original	02/04/97	220.1	Original	07/25/11	248	3rd	07/25/11
190	Original	02/04/97	221	4th	07/25/11	248.1	1st	08/09/03
191	Original	02/04/97	221.1	Original	07/25/11	249	2nd	08/13/04
192	Original	02/04/97	222	4th	07/25/11	249.1	1st	10/01/02
193	Original	02/04/97	223	3rd	08/13/04	250	1st	10/01/02
194	Original	02/04/97	224	2nd	08/13/04	251	1st	10/01/02
195	Original	02/04/97	225	2nd	08/13/04	252	16th	01/01/19
196	Original	02/04/97	226	11th	01/01/19	253	14th	07/01/16
197	Original	02/04/97	227	8th	07/01/17	**253.1***	**9th**	**07/01/22**
198	Original	02/04/97	**227.1***	**7th**	**07/01/22**	**254***	**4th**	**07/01/22**
199	Original	02/04/97	228	1st	08/09/03	255	1st	07/02/07
200	Original	02/04/97	229	Original	04/19/01	256	2nd	03/20/10
201	Original	02/04/97	230	2nd	07/25/11	257	2nd	03/20/10
202	Original	02/04/97	231	1st	07/25/11	258	2nd	03/20/10
203	Original	02/04/97	232	1st	07/25/11	259	2nd	03/20/10
204	Original	02/04/97	233	2nd	07/25/11	260	2nd	03/20/10
205	Original	02/04/97	234	1st	08/09/03	261	3rd	07/01/13
206	Original	02/04/97	235	2nd	07/25/11	262	2nd	03/20/10
207	Original	02/04/97	236	2nd	08/09/03	263	2nd	03/20/10
208	Original	02/04/97	237	Original	04/19/01	263.1	1st	07/01/16
209	Original	02/04/97	238	Original	04/19/01	264	12th	01/01/19

Tariff Advice No. TA 597-489 Effective: July 1, 2022

Issued by: GCI Communication Corp.

By: Karen Crapps Title: Director, Regulatory Affairs

RCA No. 489 3rd Revised Sheet No. 3.1

Canceling

2nd Revised Sheet No. 3.1

RECEIVED
JUN 29 2022
STATE OF ALASKA
REGULATORY COMMISSION OF ALASKA

GCI COMMUNICATION CORP.

ACCESS SERVICES
Check Sheet

Original and revised pages as names below contain all changes from the original tariff that are in effect on the date hereof.

Page	Revised	Eff. Date	Page	Revised	Eff. Date	Page	Revised	Eff. Date
265	12th	07/03/18	**289.1***	**9th**	**07/01/22**	**313***	**5th**	**07/01/22**
265.1*	**10th**	**07/01/22**	**290***	**2nd**	**07/01/22**	314	1st	07/21/08
266	4th	07/01/13	291	1st	12/20/08	315	2nd	03/20/10
267	1st	07/21/08	292	2nd	11/09/09	316	1st	07/21/08
268	3rd	09/04/09	293	2nd	11/09/09	317	2nd	03/20/10
268.1	Original	09/04/09	294	2nd	11/09/09	318	2nd	03/20/10
269	1st	07/21/08	294.1	Original	11/09/09	319	2nd	03/20/10
270	1st	07/21/08	295	2nd	11/09/09	320	1st	07/21/08
271	2nd	09/04/09	296	2nd	11/09/09	321	2nd	07/01/13
272	1st	07/21/08	297	3rd	07/01/13	322	1st	07/21/08
273	2nd	07/01/13	298	2nd	11/09/09	323	1st	07/21/08
274	1st	07/21/08	299	2nd	11/09/09	323.1	Original	07/01/13
275	1st	07/21/08	299.1	Original	07/01/13	324	9th	01/01/19
275.1	Original	07/01/13	300	9th	03/19/20	**325***	**13th**	**07/01/22**
276	12th	03/19/20	301	7th	07/01/17	**325.1***	**10th**	**07/01/22**
277	7th	07/01/17	**301.1***	**7th**	**07/01/22**	**326***	**3rd**	**07/01/22**
277.1*	**8th**	**07/01/22**	**302***	**3rd**	**07/01/22**	327	1st	12/20/08
278*	**4th**	**07/01/22**	303	Original	10/01/07	328	2nd	11/09/09
279	Original	06/28/07	304	3rd	07/25/11	329	Original	03/10/08
280	3rd	07/25/11	305	2nd	11/17/08	330	2nd	11/09/09
281	2nd	11/17/08	306	3rd	07/25/11	331	3rd	11/09/09
282	3rd	07/25/11	307	3rd	07/25/11	332	2nd	11/09/09
283	3rd	07/25/11	308	1st	11/17/08	333	2nd	11/09/09
284	1st	11/17/08	309	Original	10/01/07	334	3rd	07/01/13
285	Original	06/28/07	310	Original	10/01/07	335	2nd	11/09/09
286	Original	06/28/07	310.1	Original	10/01/07	336	2nd	11/09/09
287	Original	06/28/07	311	11th	01/01/19	336.1	Original	07/01/13
288	11th	01/01/19	312	13th	07/01/20	337	9th	01/01/19
289*	**15th**	**07/01/22**	**312.1***	**9th**	**07/01/22**	**338***	**11th**	**07/01/22**

Tariff Advice No: TA 597-489 Effective: July 1, 2022

Issued by: GCI Communication Corp.

By: Karen Crapps Title: Director, Regulatory Affairs

RCA No. 489 | 1st Revised | Sheet No. 3.2

Canceling

Original | Sheet No. 3.2

RECEIVED
JUN 29 2022
STATE OF ALASKA
REGULATORY COMMISSION OF ALASKA

GCI COMMUNICATION CORP.

ACCESS SERVICES
Check Sheet

Original and revised pages as names below contain all changes from the original tariff that are in effect on the date hereof.

Page	Revised	Eff. Date	Page	Revised	Eff. Date	Page	Revised	Eff. Date
338.1*	**10th**	**07/01/22**	367.1	Original	07/01/13			
339*	**4th**	**07/01/22**						
340	Original	11/21/08						
341	2nd	11/16/09						
341.1	Original	11/16/09						
342	Original	11/21/08						
343	Original	11/21/08						
344	Original	11/21/08						
345	2nd	11/16/09						
346	Original	11/21/08						
347	1st	07/01/13						
348	Original	11/21/08						
349	Original	11/21/08						
349.1	Original	07/01/13						
350	6th	01/01/19						
351	8th	07/01/17						
352	11th	07/01/21						
353*	**3rd**	**07/01/22**						
354	Original	09/10/10						
355	Original	09/10/10						
356	Original	09/10/10						
357	Original	09/10/10						
358	Original	09/10/10						
359	Original	09/10/10						
360	Original	09/10/10						
361	Original	09/10/10						
362	Original	09/10/10						
363	Original	09/10/10						
364	Original	09/10/10						
365	1st	07/01/13						
366	Original	03/10/08						
367	Original	09/10/10						

Tariff Advice No: TA 597-489 Effective: July 1, 2022

Issued by: GCI Communication Corp.

By: Karen Crapps Title: Director, Regulatory Affairs

RECEIVED
DEC 17 1998
State of Alaska
Public Utilities Commission

GCI COMMUNICATION CORP.

ACCESS SERVICES
Table of Contents

	Page No.	
Check Sheet	1	
Table of Contents	4	
Explanation of Symbols	10	
Explanation of Abbreviations	10	
Reference to Other Tariffs	12	
Reference to Technical Publications	12	
1. APPLICATION OF TARIFF	14	
2. GENERAL REGULATIONS	15	
2.1 Undertaking of the Telephone Company	15	
2.2 Use	21	
2.3 Obligations of the Customer	21	
2.4 Payment Arrangements and Credit Allowance	27	
2.5 Connections	34	
2.6 Definitions	35	
2.7 Audit Provision	47	
2.8 Dispute Resolution	47	
3. CARRIER COMMON LINE ACCESS SERVICE	50	
3.1 General Description	50	N
3.2 Definitions	50	
3.3 Limitations	50.1	
3.4 Undertaking of the Telephone Company	50.1	
3.5 Obligations of the Customer	50.1	
3.6 Monthly Carrier Common Line Report	50.2	
3.7 Rate Regulation	50.3	N
4. END USER ACCESS SERVICE	51	
4.1 General Description	51	
4.2 Limitations	51	
4.3 Undertaking of the Telephone Company	51	
4.4 Payment Arrangements and Credit Allowance	52	
5. ORDERING OPTIONS FOR SWITCHED AND SPECIAL ACCESS SERVICE		
5.1 General	53	
5.1.1 Ordering Conditions	53	
5.1.2 Provision of Other Services	54	
5.1.3 Expedited Orders	54	

Tariff Advice No. _____ Effective: January 1, 1999
Pursuant to R-97-5(7) and R-97-6(7)

Issued by: GCI Communication Corp.
By: T. W. [illegible] Title: Director, Rates & Tariffs

RECEIVED
MAR - 3 1997
ALASKA PUBLIC UTILITIES COMM.

GCI COMMUNICATION CORP.

ACCESS SERVICES

Table of Contents

		Page No.
5.	ORDERING OPTIONS FOR SWITCHED AND SPECIAL ACCESS SERVICE (Cont'd)	
5.2	Access Order	54
5.3	Reserved for Future Use	58
5.4	Access Order Service Intervals	59
5.5	Access Order Modification	59
5.6	Cancellation of an Access Order	60
5.7	Selection of Facilities for Access Orders	61
5.8	Charges Associated with Access Ordering	61
5.8.1	Access Order Charge	61
5.8.2	Misc. Service Order Charge	62
5.8.3	Access Order Change Charges	63
5.9	Minimum Periods and Cancellation	66
5.9.1	Minimum Periods	66
5.9.2	Development of Minimum Period Charges	66
5.9.3	Cancellation of an Access Order	67
5.9.4	Partial Cancellation Charge	68
6.	SWITCHED ACCESS SERVICE	69
6.1	General	69
6.2	Rate Categories	69
6.3	Provision and Description of Switched Access Service Feature Groups	77
6.3.1	Feature Group A (FGA)	78
6.3.2	Feature Group B (FGB)	82
6.3.3	Reserved for Future Use	85
6.3.4	Reserved for Future Use	85
6.3.5	Feature Group D (FGD)	85
6.4	WATS Access Line	90
6.5	Transmission Specifications	91
6.6	Obligation of the Telephone Company	92
6.6.1	Network Management	92
6.6.2	Reserved for Future Use	93
6.6.3	Provision of Service Performance Data	93
6.6.4	Trunk Group Measurement Reports	93

RECEIVED
MAR - 3 1997
ALASKA PUBLIC UTILITIES COMM.

GCI COMMUNICATION CORP.

ACCESS SERVICES

Table of Contents

	Page No.
6. SWITCHED ACCESS SERVICE (Cont'd)	
6.6 Obligation of the Telephone Company (Cont'd)	
6.6.5 Determination of Number of Transmission Paths	93
6.6.6 Design Blocking Measurement	94
6.6.7 Design Layout Report	96
6.6.8 Testing	96
6.7 Obligations of the Customer	97
6.7.1 Supervisory Signaling	97
6.7.2 Trunk Group Measurement Reports	97
6.8 Rate Regulations	97
6.8.1 Application of Rates and Charges	97
6.8.2 Reserved for Future Use	102
6.8.3 Reserved for Future Use	102
6.8.4 Measuring Access Minutes	102
6.8.5 Application of Rates for Extension Service	107
6.8.6 Network Blocking	108
6.8.7 800 Data Base Access Service	108
6.9 Common Switching, Transport Termination and Interim NXX Optional Features	109
6.9.1 Common Switching Nonchargeable Optional Features	109
6.9.2 Transport Termination Nonchargeable Optional Features	117
6.9.3 Chargeable Optional Features	118
7. SPECIAL ACCESS SERVICE	
7.1 General	120
7.1.1 Channel Types	120
7.1.2 Service Descriptions	122
7.1.3 Service Configurations	124
7.1.4 Alternate Use	129
7.1.5 Special Facilities Routing	129
7.1.6 Design Layout Report	129
7.1.7 Acceptance Testing	129
7.1.8 Ordering Options and Conditions	130

RECEIVED
MAR - 3 1997
ALASKA PUBLIC UTILITIES COMM.

GCI COMMUNICATION CORP.

ACCESS SERVICES

Table of Contents

		Page No.
7.	SPECIAL ACCESS SERVICE (Cont'd)	
7.2	Rate Regulations	130
7.2.1	Rate Categories	130
7.2.2	Types of Rates and Charges	133
7.2.3	Moves	135
7.2.4	Mileage Measurement	136
7.2.5	Facility Hubs	137
7.2.6	Mixed Use Analog and Digital High Capacity Services	139
7.3	Surcharge for Special Access Service	140
7.3.1	General	140
7.3.2	Application	140
7.3.3	Exemption of Special Access Service Surcharge	141
7.3.4	Rate Regulations	141
7.4	Voice Grade Service	143
7.4.1	Basic Channel Description	143
7.4.2	Technical Specifications Package & Network Channel Interfaces	143
7.4.3	Chargeable Optional Features and Functions	144
7.5	Program Audio Service (Closed Circuit)	148
7.5.1	Basic Channel Description	148
7.5.2	Technical Specifications Packages & Network Channel Interfaces	149
7.5.3	Chargeable Optional Features and Functions	149
7.6	Video Service (Closed Circuit)	149
7.6.1	Basic Channel Description	149
7.6.2	Technical Specifications Packages & Network Channel Interfaces	150
7.7	Digital Data Service	150
7.7.1	Basic Channel Description	150
7.7.2	Technical Specifications Packages & Network Channel Interface	151
7.7.3	Chargeable Optional Feature and Functions	152
7.8	High Capacity Service	153
7.8.1	Basic Channel Description	153
7.8.2	Technical Specification Packages & Network Channel Interfaces	153
7.8.3	Chargeable Optional Features and Functions	154
7.9	Individual Case Filings	155

RECEIVED
MAR - 3 1997
ALASKA PUBLIC UTILITIES COMM.

GCI COMMUNICATION CORP.

ACCESS SERVICES

Table of Contents

	Page No.
8. SPECIAL FACILITIES AND SPECIALIZED SERVICE	156
8.1 Description	156
8.1.1 Diversity	156
8.1.2 Avoidance	156
8.1.3 Diversity and Avoidance Combined	156
8.1.4 Cable-Only Facilities	156
8.2 Specialized Service or Arrangements	157
9. ADDITIONAL ENGINEERING, ADDITIONAL LABOR AND MISCELLANEOUS SERVICES	158
9.1 Additional Engineering	158
9.2 Additional Labor	158
9.2.1 Overtime Installation	158
9.2.2 Overtime Repair	159
9.2.3 Stand by	159
9.2.4 Testing and Maintenance with Other Telephone Companies	159
9.2.5 Testing Services	159
9.2.6 Other Labor	159
9.3 Miscellaneous Services	160
9.3.1 Testing Services	160
9.3.2 Maintenance of Service	164
9.3.3 Telecommunications Service Priority	164
9.3.4 Access to Intrastate Interexchange Carriers	166
9.3.5 Blocking Services	172
10. SPECIAL CONSTRUCTION	173
10.1 General	173
10.2 Conditions Requiring Special Construction	173

RECEIVED
MAY 18 2001
State of Alaska
Regulatory Commission of Alaska

GCI COMMUNICATION CORP.

ACCESS SERVICES
Table of Contents

	Page No.	
11. ACCESS SERVICE INTERFACES AND TRANSMISSION SPECIFICATIONS		
11.1 Switched Access Service	174	
11.1.1 Transport Interface Groups	174	
11.1.2 Standard Transmission Specifications	182	
11.1.3 Data Transmission Parameters	188	
11.2 Special Access Service	190	
11.2.1 Network Channel (NC) Codes	193	
11.2.2 Network Channel Interface (NCI) Codes	200	
12. RESERVED FOR FUTURE USE	216	
13. RATES AND CHARGES - Anchorage		
13.1 CCL Rates	216.1	
13.2 Switched Access Service	217	
13.2.1 Nonrecurring Charges	217	
13.2.2 Recurring Charges	217	
13.2.3 Equal Access Recovery Charge	218	
13.2.4 Presubscription Change Charge	218	
13.2.5 Assumed Minutes of Use	218	
13.3 Special Access Service	219	
13.3.1 Surcharge for Special Access Service	219	
13.3.2 Voice Grade Service	220	
13.3.3 Digital Data Service	221	
13.3.4 High Capacity Service	222	
13.4 Additional Engineering, Additional Labor and Miscellaneous Services	223	
13.4.1 The Charges for Additional Engineering	223	
13.4.2 The Charges for Additional Labor	224	
14. RATES AND CHARGES - Fairbanks		(N)
14.1 CCL Rates	226	
14.2 Switched Access Service	227	
14.2.1 Nonrecurring Charges	227	
14.2.2 Recurring Charges	227	
14.2.3 Equal Access Recovery Charge	228	
14.2.4 Presubscription Change Charge	228	
14.2.5 Assumed Minutes of Use	228	(N)

Tariff Advice No. TA 89 Effective: April 19, 2001

Issued by: GCI Communication Corp.

By: F.W. [illegible] Title: Director, Rates & Tariffs

RECEIVED

FEB 21 2007

STATE OF ALASKA
REGULATORY COMMISSION OF ALASKA

GCI COMMUNICATION CORP.

ACCESS SERVICES
Table of Contents

	Page No.	
14. RATES AND CHARGES (Cont'd)		
14.3 Special Access Service	229	
14.3.1 Surcharge for Special Access Service	229	
14.3.2 Voice Grade Service	230	
14.3.3 Digital Data Service	233	
14.3.4 High Capacity Service	235	
14.4 Additional Engineering, Additional Labor and Miscellaneous Services	237	
14.4.1 The Charges for Additional Engineering	237	
14.4.2 The Charges for Additional Labor	238	
15. RATES AND CHARGES – Juneau, Ft. Wainwright, and Eielson AFB		
15.1 CCL Rates	240	
15.2 Switched Access Service	241	
15.2.1 Nonrecurring Charges	241	
15.2.2 Recurring Charges	241	
15.2.3 Equal Access Recovery Charge	242	
15.2.4 Presubscription Change Charge	242	
15.2.5 Assumed Minutes of Use	242	
15.3 Special Access Service	243	
15.3.1 Surcharge for Special Access Service	243	
15.3.2 Voice Grade Service	244	
15.3.3 Digital Data Service	247	
15.3.4 High Capacity Service	248	
15.4 Additional Engineering, Additional Labor and Miscellaneous Services	249.1	
15.4.1 The Charges for Additional Engineering	249.1	
15.4.2 The Charges for Additional Labor	250	
16. RATES AND CHARGES – Matanuska-Susitna		(N)
16.1 CCL Rates	252	
16.2 Switched Access Service	253	
16.2.1 Nonrecurring Charges	253	
16.2.2 Recurring Charges	253	
16.2.3 Equal Access Recovery Charge	254	
16.2.4 Presubscription Change Charge	254	
16.2.5 Assumed Minutes of Use	254	(N)

Pursuant to:
U-06-136(3)

Effective: February 16, 2007

Issued by: GCI Communication Corp.

By: [signature] Title: Tariffs & Licenses Manager

RCA No. 489 3rd Revised Sheet No. 9.2

Canceling

2nd Revised Sheet No. 9.2

RECEIVED

APR 11 2014

STATE OF ALASKA
REGULATORY COMMISSION OF ALASKA

GCI COMMUNICATION CORP.

ACCESS SERVICES
Table of Contents

	Page No.	
16. RATES AND CHARGES – Matanuska-Susitna (Cont'd)		
16.3 Special Access Service	255	
16.3.1 Surcharge for Special Access Service	255	
16.3.2 Voice Grade Service	256	
16.3.3 Digital Data Service	257	
16.3.4 High Capacity Service	259	
16.4 Add'l Engineering, Labor and Miscellaneous Services – Special Access	261	(T)
16.4.1 The Charges for Additional Engineering	261	
16.4.2 The Charges for Additional Labor	261	
16.5 Additional Engineering, Labor and Miscellaneous Service – Switched Access	263.1	(N)
17. RATES AND CHARGES – Ketchikan		
17.1 CCL Rates	264	
17.2 Switched Access Service	265	
17.2.1 Nonrecurring Charges	265	
17.2.2 Recurring Charges	265	
17.2.3 Equal Access Recovery Charge	266	
17.2.4 Presubscription Change Charge	266	
17.2.5 Assumed Minutes of Use	266	
17.3 Special Access Service	267	
17.3.1 Surcharge for Special Access Service	267	
17.3.1a Surcharge Monthly Rate	267	
17.3.1b Telecommunications Service Priority Charge	267	
17.3.1c Special Access Ordering	267	
17.3.2 Voice Grade Service	268	
17.3.3 Digital Data Service	270	
17.3.4 High Capacity Service	271	
17.4 Add'l Engineering, Labor and Miscellaneous Services – Special Access	273	(T)
17.4.1 The Charges for Additional Engineering	273	
17.4.2 The Charges for Additional Labor	273	
17.5 Additional Engineering, Labor and Miscellaneous Service – Switched Access	275.1	(N)
18. RATES AND CHARGES – Glacier State		
18.1 CCL Rates	276	
18.2 Switched Access Service	277	
18.2.1 Nonrecurring Charges	277	
18.2.2 Recurring Charges	277	
18.2.3 Equal Access Recovery Charge	278	
18.2.4 Presubscription Change Charge	278	
18.2.5 Assumed Minutes of Use	278	

Pursuant to U-13-134(7) Effective: July 1, 2013

Issued by: GCI Communication Corp.

By: [signature] for Cindy Hall Title: Tariffs & Licenses Manager

RCA No. 489 | 1st Revised | Sheet No. 9.3

Canceling

Original | Sheet No. 9.3

RECEIVED
APR 11 2014
STATE OF ALASKA
REGULATORY COMMISSION OF ALASKA

GCI COMMUNICATION CORP.

ACCESS SERVICES
Table of Contents

	Page No.	
18. RATES AND CHARGES – Glacier State (Cont'd)		
18.3 Special Access Service	279	
18.3.1 Surcharge for Special Access Service	279	
18.3.1a Surcharge Monthly Rate	279	
18.3.1b Telecommunications Service Priority Charge	279	
18.3.1c Special Access Ordering	279	
18.3.2 Voice Grade Service	280	
18.3.3 Digital Data Service	282	
18.3.4 High Capacity Service	283	
18.4 Additional Engineering, Additional Labor and Miscellaneous Services	285	
18.4.1 The Charges for Additional Engineering	285	
18.4.2 The Charges for Additional Labor	285	
19. RATES AND CHARGES – Seward		
19.1 CCL Rates	288	
19.2 Switched Access Service	289	
19.2.1 Nonrecurring Charges	289	
19.2.2 Recurring Charges	289	
19.2.3 Equal Access Recovery Charge	290	
19.2.4 Presubscription Change Charge	290	
19.2.5 Assumed Minutes of Use	290	
19.3 Special Access Service	291	
19.3.1 Surcharge for Special Access Service	291	
19.3.1a Surcharge Monthly Rate	291	
19.3.1b Telecommunications Service Priority Charge	291	
19.3.1c Special Access Ordering	291	
19.3.2 Voice Grade Service	292	
19.3.3 Digital Data Service	294	
19.3.4 High Capacity Service	295	
19.4 Add'l Engineering, Labor and Miscellaneous Services – Special Access	297	(T)
19.4.1 The Charges for Additional Engineering	297	
19.4.2 The Charges for Additional Labor	297	
19.5 Additional Engineering, Labor and Miscellaneous Service – Switched Access	299.1	(N)
20. RATES AND CHARGES – Sitka		
20.1 CCL Rates	300	

Pursuant to U-13-134(7) Effective: July 1, 2013

Issued by: GCI Communication Corp.

By: Mindy Pleasant for Cindy Hall Title: Tariffs & Licenses Manager

RECEIVED
OCT 01 2008
STATE OF ALASKA
REGULATORY COMMISSION OF ALASKA

GCI COMMUNICATION CORP.

ACCESS SERVICES
Table of Contents

	Page No.	
20. RATES AND CHARGES –Sitka (Cont'd)		
20.2 Switched Access Service	301	
20.2.1 Nonrecurring Charges	301	
20.2.2 Recurring Charges	301	
20.2.3 Equal Access Recovery Charge	302	
20.2.4 Presubscription Change Charge	302	
20.2.5 Assumed Minutes of Use	302	
20.3 Special Access Service	303	
20.3.1 Surcharge for Special Access Service	303	
20.3.1a Surcharge Monthly Rate	303	
20.3.1b Telecommunications Service Priority Charge	303	
20.3.1c Special Access Ordering	303	
20.3.2 Voice Grade Service	304	
20.3.3 Digital Data Service	306	
20.3.4 High Capacity Service	307	
20.4 Additional Engineering, Additional Labor and Miscellaneous Services	309	
20.4.1 The Charges for Additional Engineering	309	
20.4.2 The Charges for Additional Labor	309	
21. RATES AND CHARGES – Copper Valley		
21.1 CCL Rates	311	
21.2 Switched Access Service	312	
21.2.1 Nonrecurring Charges	312	
21.2.2 Recurring Charges	312	
21.2.3 Equal Access Recovery Charge	313	
21.2.4 Presubscription Change Charge	313	
21.2.5 Assumed Minutes of Use	313	
21.3 Special Access Service	314	
21.3.1 Surcharge for Special Access Service	314	
21.3.1a Surcharge Monthly Rate	314	(C)
21.3.1b Telecommunications Service Priority Charge	314	(C)
21.3.1c Special Access Ordering	314	(C)
21.3.2 Voice Grade Service	315	
21.3.3 Digital Data Service	318	
21.3.4 High Capacity Service	319	

Pursuant to:
U-08-135(1)

Effective: November 21, 2008

Issued by: GCI Communication Corp.

By: Jennifer K.G. Robertson

Title: Tariffs & Licenses Manager

RCA No. 489 2nd Revised Sheet No. 9.5

Canceling

1st Revised Sheet No. 9.5

RECEIVED

APR 11 2014

STATE OF ALASKA
REGULATORY COMMISSION OF ALASKA

GCI COMMUNICATION CORP.

ACCESS SERVICES
Table of Contents

	Page No.	
21. RATES AND CHARGES – Copper Valley (cont'd)		
21.4 Add'l Engineering, Labor and Miscellaneous Services – Special Access	321	(T)
21.4.1 The Charges for Additional Engineering	321	
21.4.2 The Charges for Additional Labor	321	
21.5 Additional Engineering, Labor and Miscellaneous Service – Switched Access	323.1	(N)
22. RATES AND CHARGES – Nome		
22.1 CCL Rates	324	
22.2 Switched Access Service	325	
22.2.1 Nonrecurring Charges	325	
22.2.2 Recurring Charges	325	
22.2.3 Equal Access Recovery Charge	326	
22.2.4 Presubscription Change Charge	326	
22.2.5 Assumed Minutes of Use	326	
22.3 Special Access Service	327	
22.3.1 Surcharge for Special Access Service	327	
22.3.1a Surcharge Monthly Rate	327	
22.3.1b Telecommunications Service Priority Charge	327	
22.3.1c Special Access Ordering	327	
22.3.2 Voice Grade Service	328	
22.3.3 Digital Data Service	331	
22.3.4 High Capacity Service	332	
22.4 Add'l Engineering, Labor and Miscellaneous Services – Special Access	334	(T)
22.4.1 The Charges for Additional Engineering	335	
22.4.2 The Charges for Additional Labor	336	
22.5 Additional Engineering, Labor and Miscellaneous Service – Switched Access	336.1	(N)
23. RATES AND CHARGES – Arctic Slope Area		
23.1 CCL Rates	337	
23.2 Switched Access Service	338	
23.2.1 Nonrecurring Charges	338	
23.2.2 Recurring Charges	338	
23.2.3 Equal Access Recovery Charge	339	
23.2.4 Presubscription Change Charge	339	
23.2.5 Assumed Minutes of Use	339	

Pursuant to U-13-134(7) Effective: July 1, 2013

Issued by: GCI Communication Corp.

By: [illegible] for Cindy Hall Title: Tariffs & Licenses Manager

RCA No. 489 | 2nd Revised | Sheet No. 9.6

Canceling

1st Revised | Sheet No. 9.6

RECEIVED
APR 11 2014
STATE OF ALASKA
REGULATORY COMMISSION OF ALASKA

GCI COMMUNICATION CORP.

ACCESS SERVICES
Table of Contents

	Page No.	
23. RATES AND CHARGES – Arctic Slope Area		
23.3 Special Access Service	340	
23.3.1 Surcharge for Special Access Service	340	
23.3.1a Surcharge Monthly Rate	340	
23.3.1b Telecommunications Service Priority Charge	340	
23.3.1c Special Access Ordering	340	
23.3 Special Access Service		
23.3.2 Voice Grade Service	341	
23.3.3 Digital Data Service	344	
23.3.4 High Capacity Service	345	
23.4 Add'l Engineering, Labor and Miscellaneous Services – Special Access	347	(T)
23.4.1 The Charges for Additional Engineering	347	
23.4.2 The Charges for Additional Labor	347	
23.5 Additional Engineering, Labor and Miscellaneous Service – Switched Access	349.1	(N)
24. RATES AND CHARGES – Cordova Area		
24.1 CCL Rates	350	
24.2 Switched Access Service	351	
24.2.1 Nonrecurring Charges	351	
24.2.2 Recurring Charges	352	
24.2.3 Equal Access Recovery Charge	353	
24.2.4 Presubscription Change Charge	353	
24.2.5 Assumed Minutes of Use	353	
24.3 Special Access Service	354	
24.3.1 Surcharge for Special Access Service	354	
24.3.1a Surcharge Monthly Rate	354	
24.3.1b Telecommunications Service Priority Charge	354	
24.3.1c Special Access Ordering	354	
24.3.2 Voice Grade Service	355	
24.3.3 Digital Data Service	360	
24.3.4 High Capacity Service	362	
24.4 Add'l Engineering, Labor and Miscellaneous Services – Special Access	365	(T)
24.4.1 The Charges for Additional Engineering	365	
24.4.2 The Charges for Additional Labor	365	
24.5 Additional Engineering, Labor and Miscellaneous Service – Switched Access	367.1	(N)

Pursuant to U-13-134(7) Effective: July 1, 2013

Issued by: GCI Communication Corp.

By: [illegible] for Cindy Hall Title: Tariffs & Licenses Manager

RECEIVED
MAR -3 1997
ALASKA PUBLIC UTILITIES COMM.

GCI COMMUNICATION CORP.

ACCESS SERVICES

Explanation of Symbols

(C) - to denote a changed condition or regulation.
(D) - to denote a discontinued rate, regulation or condition.
(I) - to denote an increase.
(L) - to denote that material has been relocated from or to another sheet or place in the Tariff with no change in text, rate, rule or condition.
(N) - to denote a new rate, regulation, or condition or sheet.
(R) - to denote a reduction.
(S) - to denote reissued matter.
(T) - to denote a change in text for clarification.

Explanation of Abbreviations

ac	Alternating current
AECA	Alaska Exchange Carriers Association, Inc.
ANI	Automatic Number Identification
AT&T	American Telephone and Telegraph Company
BD	Business Day
BHMC	Busy Hour Minutes of Capacity
CCS	Centum Call Seconds
CO	Central Office
Cont'd	Continued
CPE	Customer Premises Equipment
DA	Directory Assistance
dB	Decibel
dc	Direct current
EPL	Echo Path Loss
ESS	Electronic Switching System
ESSX	Electronic Switching System Exchange

RECEIVED
MAY 23 1997
ALASKA PUBLIC UTILITIES COMM.

GCI COMMUNICATION CORP.

ACCESS SERVICES

Explanation of Abbreviations

f	Frequency
FCC	Federal Communications Commission
FX	Foreign Exchange
Hz	Hertz
IC	Interexchange Carrier
ICB	Individual Case Basis
kbps	Kilobits per second
kHz	Kilohertz
LATA	Local Access and Transport Area
MMUC	Minimum Monthly Usage Charge
MRC	Monthly Recurring Charge
MTS	Message Telephone Service
NPA	Numbering Plan Area
NRC	Non-recurring Charge
NTS	Non-Traffic Sensitive
PBX	Private Branch Exchange
PCM	Pulse Code Modulation
POT	Point of Termination
TS	Traffic Sensitive
TSPS	Traffic Service Position System
TV	Television
USOC	Uniform Service Order Code
VG	Voice Grade
V&H	Vertical & Horizontal
WATS	Wide Area Telecommunications Service(s)

RECEIVED
MAR - 3 1997
ALASKA PUBLIC UTILITIES COMM.

GCI COMMUNICATION CORP.

ACCESS SERVICES

Reference to Other Tariffs

Whenever reference is made in this tariff to other tariffs of the Company, the reference is to the tariffs in force as of the effective date of this tariff, and to amendments thereto and successive issues thereof.

Reference to Technical Publications

The following technical publications are referenced in this tariff and may be obtained from Bell Communications Research, Inc., Distribution Storage Center, 60 New England Ave., Piscataway, NJ 08854:

Technical Reference:

1. PUB 41451
   Issued: January 1983 Available: May 17, 1983
2. PUB 41004
   Issued: October 1973 Available: October 1973
3. TR-NPL-000334
   Issued: June 1986
4. TR-NPL-000335
   Issued: February 1987
5. TR-NPL-000337
   Issued: July 1987
6. TR-NPL-000341
   Issued: March 1989
7. SR-ISD-000307
   Issued: March 1988
8. PUB 62508
   Issued: December 1983 Available: January 1984
9. PUB 62310
   Issued: September 1983 Available: October 1983
10. PUB 62411
    Issued: September 1983 Available: October 1983

RECEIVED
MAR - 3 1997
ALASKA PUBLIC UTILITIES COMM.

GCI COMMUNICATION CORP.

ACCESS SERVICES

Reference to Technical Publications

The following technical publication is referenced in this tariff and may be obtained from the Bell Communications Technical Education Center Room B02, 6200 Route 53, Lisle, IL 60532:

Telecommunications Transmission Engineering
Volume 3 - Networks and Services (Chapters 6 and 7)
Second Edition, 1980
Issued: June 1980 Available: June 1980

The following technical publication is referenced in this tariff and may be obtained from the National Exchange Carrier Association, Inc., Director - Tariff and Regulatory Matters, 100 S. Jefferson Road, Whippany, NJ 07981, and the Federal Communication's commercial contractor.

PUB AS No. 1 - Issue II
Issued: May 1984 Available: May 1984
Addendum: March 1987

RECEIVED
MAR - 3 1997
ALASKA PUBLIC UTILITIES COMM.

GCI COMMUNICATION CORP.

ACCESS SERVICES

1. Application of Tariff

1.1 This tariff contains regulations, rates and charges applicable to the provision of End User Access, Switched Access and Special Access Services, and other miscellaneous services offered by GCI Communication Corp., herein after GCICC, GCI, or Company.

1.2. The provision of such services by the Company as set forth in this tariff does not constitute a joint undertaking with the customer for the furnishing of any service.

1.3 GCICC has the primary responsibility for preparing, filing, and supporting this tariff; billing and collecting access charges; and handling disputes.

RECEIVED
APR 13 2001
State of Alaska
Regulatory Commission of Alaska

GCI COMMUNICATION CORP.

ACCESS SERVICES

2. General Regulations

2.1 Undertaking of the Company

2.1.1 Scope

(A) The Company does not undertake to transmit messages under this tariff.

(B) The Company shall be responsible only for the installation, operation and maintenance of the service it provides. GCI may determine the most efficient manner of provisioning service under this tariff, provided that the method chosen meets the service requirements of the customer, consistent with the tariff and applicable law, and either maintain or improves the quality of service to the customer. GCI shall provide thirty days advance notice to private line, access, and wholesale customers of network changes that may affect the customer. (N) (N)

(C) The Company will, for maintenance purposes, test its services only to the extent necessary to detect and/or clear troubles.

(D) Services are provided 24 hours daily, seven days per week, except as set forth in other sections of this tariff.

2.1.2 Limitations

(A) The customer may assign or transfer the use of services under this tariff if there is no interruption in or relocation of services. The assignee or transferee must agree to assume all outstanding indebtedness for services provided under this tariff and any termination liability associated with the services provided. The customer will remain jointly liable with the assignee or transferee for any obligations existing at the time of the assignment.

Prior to assignment, the Company must acknowledge in writing that all requirements have been met. Acknowledgment will be made within fifteen days after the Company has been notified of the proposed assignment.

(B) All services offered in this tariff will be provided on a first-come first-served basis.

RECEIVED
MAR -3 1997
ALASKA PUBLIC UTILITIES COMM.

ACCESS SERVICES

2. General Regulations (Cont'd)
   2.1 Undertaking of the Company (Cont'd)

   2.1.3 Liability

   (A) Except in the case of willful misconduct for which the Company's liability is not limited by this tariff, the Company's liability for damages shall not exceed an amount equal to the proportionate tariff charge for the period during which the service was affected. This liability for damages shall be in addition to any amounts that may be due the customer as described in Section 2.4.3 following.

   (B) The Company shall not be liable for any act or omission of any other carriers or customer providing a portion of a service, nor shall the Company for its own act or omission hold liable any other carrier or customer providing a portion of a service.

   (C) The Company is not liable for damages to the customer premises resulting from the furnishing of a service, including the installation and removal of equipment and associated wiring, unless the damage is caused by the Company's negligence.

   (D) The Company shall be indemnified, defended and held harmless by the end user against any claim, loss or damage arising from the end user's use of services offered under this tariff, involving:

   (1) Claims for libel, slander, invasion of privacy, or infringement of copyright arising from the end user's own communications;

   (2) Claims for patent infringement arising from the end user's acts combining or using the service furnished by the Company in connection with facilities or equipment furnished by the end users or Intrastate Carriers (IC) or;

   (3) All other claims arising out of any act or omission of the end user in the course of using services provided pursuant to this tariff.

RECEIVED
MAR - 3 1997
ALASKA PUBLIC UTILITIES COMM.

GCI COMMUNICATION CORP.

ACCESS SERVICES

2. General Regulations (Cont'd)
   2.1 Undertaking of the Company (Cont'd)
      2.1.3 Liability (Cont'd)

(E) The Company shall be indemnified, defended and held harmless by the IC against any claim, loss or damage arising from the IC's use of services offered under this tariff involving;

(1) Claims for libel, slander, invasion of privacy, or infringement of copyright arising from the IC's own communications;

(2) Claims for patent infringement arising from the IC's acts combining or using the service furnished by the Company in connection with facilities or equipment furnished by the end user or IC or;

(3) All other claims arising out of any act or omission of the IC in the course of using services provided pursuant to this tariff.

(F) The Company's failure to provide or maintain services under this tariff shall be excused by labor difficulties, governmental orders, civil commotions, criminal actions taken against the Company, acts of God and other circumstances beyond the Company's reasonable control, subject to the Credit Allowance for a Service Interruption as set forth in 2.4.3 following.

2.1.4 Provision of Services

The Company's obligation to furnish the services described in this tariff is dependent upon its ability to provide such services.

The Company will provide the services it is reasonably capable of providing, and it will provide a written explanation of its inability to provide services when denying requests for service under this sections.

RECEIVED
MAR - 3 1997
ALASKA PUBLIC UTILITIES COMM.

ACCESS SERVICES

2. General Regulations (Cont'd)
   2.1 Undertaking of the Company (Cont'd)

2.1.5 Installation and Termination of Services

The services provided under this tariff (A) will include any entrance cable or drop wiring and wire or intrabuilding cable to that point where provision is made for termination of the Company's outside distribution network facilities at a protective location inside a customer-designated premises and (B) will be installed by the Company to such Point of Termination. The point of demarcation shall be by mutual agreement of the Company and the IC.

Wire required within a building to extend Access Service facilities will be provided, at the Customer's request for which nonrecurring charges contained in other location tariff or rate schedules will apply.

2.1.6 Maintenance of Services

The services provided under this tariff shall be maintained by the Company. The customer or others may not rearrange, move, disconnect, remove or attempt to repair any facilities provided by the Company other than by connection or disconnection to any interface means used, except with the written consent of the Company.

2.1.7 Changes and Substitutions

Except as provided for equipment and systems subject to FCC Part 68 Regulations at 47 C.F.R. section 68.110(b), the Company may, where such action is reasonably required in the operation of its business, (A) change any facilities used in providing service under this tariff, (B) change minimum protection criteria, (C) change operating or maintenance characteristics of facilities or (D) change operations or procedures of the Company. The Company shall not be responsible if the change renders customer furnished services obsolete or requires modification of the customer furnished services. If such change materially affects the operating characteristics of the facility, the Company will provide reasonable notification to the customer in writing. Reasonable time will be allowed for any redesign and implementation required by the changes made. The Company will work cooperatively with the customer to determine reasonable notification procedures.

RECEIVED
MAR -3 1997
ALASKA PUBLIC UTILITIES COMM.

GCI COMMUNICATION CORP.

ACCESS SERVICES

2. General Regulations (Cont'd)
   2.1 Undertaking of the Company (Cont'd)

   2.1.8 Refusal and Discontinuance of Service

   (A) Unless the provisions of 2.2.1(B) apply, if a customer fails to comply with 2.1.6, 2.2.2, 2.3.1, 2.3.5, 2.4 or 2.5.1, the Company shall:

   (1) Send notice by Certified U.S. Mail to the person designated by that customer to receive such written notice regarding 2.1.8(A)2.

   (2) Fifteen calendar days after sending the notice to the customer:

   (a) Refuse to accept additional applications for service and/or refuse to complete any pending orders for service by the non-complying customer at any time after the date of advising is sent.
   (b) Discontinue the provision of the services to the non-complying customer at any time thereafter.

   (3) In the case of discontinuance, all applicable charges, including termination charges, shall become due, and the Company will deny access to the defaulting IC.

   (B) At this time the Company will execute upon the delinquent customer's payment bond, letter of credit or cash deposit and initiate any other appropriate legal action. If the Company does not discontinue the provision of the services involved on the date specified in the fifteen (15) calendar days notice, and the customer's noncompliance continues, nothing contained herein shall preclude the Company's right to discontinue the provision of the services to the non-complying customer without further notice.

   In the event the account is not paid in accordance with the fifteen (15) calendar days notice and the defaulting IC's service has been discontinued, end user customers will have recourse to dialing 10XXX, or such other dialing arrangements as appropriate for a particular LEC to complete long distance calls through alternate IC's.

RECEIVED
MAR -3 1997
ALASKA PUBLIC UTILITIES COMM.

ACCESS SERVICES

2. General Regulations (Cont'd)
   2.1 Undertaking of the Company (Cont'd)
      2.1.8 Refusal and Discontinuance of Service (Cont'd)

(C) As soon as the Company discontinues service to an IC, it will provide a recorded message to all of the IC's end users that the service is terminated. End users will be informed of available dialing alternatives and how to arrange interexchange service through another IC.

(D) For wholesale applications, the wholesale provider may be required to disconnect service from the wholesale user if the Company does not have the capability to do so.

2.1.9 Notification of Service-Affecting Activities

The Company will provide the customer reasonable notification of service-affecting activities that may occur in normal operation of its business. Such activities may include, but are not limited to, equipment additions, removals, and routine preventative maintenance. Generally, such activities are not individual customer service specific, they affect many customer services. No specific advance notification period is applicable to all service activities. The Company will work cooperatively with the customer to determine the notification requirements.

2.1.10 Provision and Ownership of Telephone Numbers

The Company reserves the reasonable right to assign, designate or change telephone numbers associated with Access Services, or the Company serving central office prefixes associated with such numbers, when necessary in the conduct of its business. Should it become necessary to make a change, the Company will furnish to the customer six months notice, by certified mail, of the effective date and an explanation of the reason(s) for such change(s).

2.1.11 Coordination with Respect to Network Contingencies

The Company intends to work cooperatively with the customer to develop network contingency plans in order to maintain maximum network capability following natural or man-made disasters which affect telecommunications services.

RECEIVED
MAR - 3 1997
ALASKA PUBLIC UTILITIES COMM.

GCI COMMUNICATION CORP.

ACCESS SERVICES

2. General Regulations (Cont'd)

2.2 Use

2.2.1 Interference or Impairment

(A) The facilities and equipment provided by the customer which are used in conjunction with Company facilities in the provision of Access Service shall not interfere with or impair the provision of service by the Company.

(B) If interference as described in (A) above exists, except for equipment subject to the F.C.C. Part 68 rules in 47 C.F.R. Section 68.108, when practicable, the Company will notify the customer that service will be temporarily disconnected until the problem is corrected. When prior notice is not practical, the Company may temporarily disconnect services without prior notification to the customer. The customer will be notified of the action as soon as possible and given the opportunity to correct the problem. During the period of discontinuance, the credit allowance for service interruptions as set forth in 2.4.3 following does not apply.

2.2.2 Unlawful Use

The service provided under this tariff shall not be used for an unlawful purpose.

2.3 Obligations of the Customer

2.3.1 Damages

The customer shall reimburse the Company for damages to the Company facilities utilized to provide services under this tariff caused by the negligence or willful act of the customer, or resulting from the customer's improper use of the Company facilities, or due to malfunction of any facilities or equipment provided by other than the Company. Nothing in the foregoing provision shall be interpreted to hold one customer liable for another customer's actions. The Company will, upon reimbursement for damages, cooperate with the customer in prosecuting a claim against the person causing such damage and the customer shall be subrogated to the right of recovery by the Company for the damages to the extent of such payment.

RECEIVED
MAR - 3 1997
ALASKA PUBLIC UTILITIES COMM.

GCI COMMUNICATION CORP.

ACCESS SERVICES

2. General Regulations (Cont'd)
   2.3 Obligations of the Customer (Cont'd)

2.3.2 Ownership of Facilities

Facilities utilized by the Company to provide service under the provisions of this tariff shall remain the property of the Company. Such facilities shall be returned to the Company by the customer, whenever requested, within a reasonable period following the request in as good condition as reasonable wear will permit. Any cost of repair or replacement for unreasonable wear or damage will be billed to the customer who utilized the equipment.

2.3.3 Equipment Space and Power

The customer shall furnish or arrange to have furnished to the Company, at no charge, equipment space and electrical power required by the Company to provide services under this tariff at the points of termination of such services. The selection of ac or dc power shall be mutually agreed to by the customer and the Company. The customer shall also make necessary arrangements in order that the Company will have access to such space at reasonable times for installing, testing, repairing or removing Company services.

2.3.4 Availability for Testing

The services provided under this tariff shall be available to the Company at times mutually agreed upon in order to permit the Company to make tests and adjustments appropriate for maintaining the services in satisfactory operating condition. Such tests and adjustments shall be completed within a reasonable time. No credit will be allowed for any interruptions involved during such tests and adjustments.

2.3.5 Balance

All signals for transmission over the services provided under this tariff shall be delivered by the customer balanced to ground except for ground start, duplex (DX) and McCulloh-Loop (Alarm System) type signaling and dc telegraph transmission at speeds of 75 baud or less.

RECEIVED
MAR - 3 1997
ALASKA PUBLIC UTILITIES COMM.

ACCESS SERVICES

2. General Regulations (Cont'd)
   2.3 Obligations of the Customer (Cont'd)

2.3.6 Design of Customer Services

Subject to the provisions of 2.1.7 preceding, the customer shall be solely responsible, at its own expense, for the overall design of its services and for any redesigning or rearrangement of its services which may be required because of changes in facilities, operations or procedures of the Company, minimum protection criteria or operating or maintenance characteristics of the facilities.

2.3.7 Reference to the Company

The customer may advise End Users that certain services are provided by the Company in connection with the service the customer furnishes to End Users; however, the customer shall not represent that the Company jointly participates in the customer's services.

2.3.8 Claims and Demands for Damages

The customer shall defend, indemnify and save harmless the Company from and against any suits, claims, losses or damages, including punitive damages, attorney fees and court costs by third persons arising out of the construction, installation, operation, maintenance, or removal of the customer's circuits, facilities, or equipment connected to the Company's services provided under this tariff, including, without limitation, Workmen's Compensation claims, actions for infringement of copyright and/or unauthorized use of program material, libel and slander actions based on the content of communications transmitted over the customer's circuits, facilities or equipment, and proceedings to recover taxes, fines, or penalties for failure of the customer to obtain or maintain in effect any necessary certificates, permits, licenses, or other authority to acquire or operate the services provided under this tariff; provided however, the foregoing indemnification shall not apply to suits, claims, and demands to recover damages for damage to property, death, or personal injury unless such suits, claims or demands are based on the tortuous conduct of the customer, its

RECEIVED
MAR - 3 1997
ALASKA PUBLIC UTILITIES COMM.

ACCESS SERVICES

2. General Regulations (Cont'd)
2.3 Obligations of the Customer (Cont'd)
2.3.8 Claims and Demands for Damages (Cont'd)

officers, agents or employees. The customer shall defend, indemnify and save harmless the Company from and against any suits, claims, losses or damages, including punitive damages, attorney fees and court costs by the customer or third parties arising out of any act or omission of the customer in the course of using services provided under this tariff.

2.3.9 Jurisdictional Report Requirements

The Company cannot in all cases determine the jurisdictional nature of customer traffic and its related access minutes. In such cases the customer may be called upon to provide a projected estimate of its traffic, split between the interstate and intrastate jurisdictions. The following regulations govern such estimates, their reporting by the customer and cases were the Company will develop jurisdictional percentages.

(A) When a customer orders Switched Access Service(s), the Company, where the jurisdiction can be determined from the call detail, will determine the customer's Intrastate percentage as follows:

For originating access minutes, the Intrastate percentage will be developed when the Switched Access Service access minutes for that customer are measured by dividing the customer's measured Intrastate access minutes by the Company's total originating measured access minutes for that customer when the call detail is adequate to determine the appropriate jurisdiction.

When call details are insufficient to determine the jurisdiction for the call, the customer shall supply verifiable access minutes or the Company will develop the access minutes according to Section 2.3.9(C).

Verifiable terminating Switched Access Service minutes will be measured and provided to the Company by the customer according to Section 2.3.9(C).

RECEIVED
MAR -3 1997
ALASKA PUBLIC UTILITIES COMM.

ACCESS SERVICES

2. General Regulations (Cont'd)
   2.3 Obligations of the Customer (Cont'd)
      2.3.9 Jurisdictional Report Requirements (Cont'd)

(B) Except where Company measured access minutes are used as set forth in (A), preceding, the customer reported intrastate percentage of use as set forth in (A), preceding will be used until the customer reports a different projected intrastate percentage.

The customer shall provide in writing, updates to the intrastate (Percent State Usage - PSU) and interstate (Percent Interstate Usage - PIU) jurisdictional report on a quarterly basis, by service, and by NXX. The customer shall forward to the Company a revised report, to be received no later than 15 days after the first of January, April, July and October. The revised report shall show the PSU and PIU for the past three months ending the last billing cycle of December, March, June and September, respectively, for each service arranged for intrastate use. The PSU reported in January, April, July and October will be effective on the bill date of each such month and will serve as the basis for the next three months' billing beginning in February, May, August and November, respectively. The customer has the option to provide the report on a monthly basis. If monthly reports are provided, the customer is not required to provide quarterly summaries.

When submitting the PSU, the customer should include a summary sheet explaining how the PSU was determined. The customer should calculate its PSU based on the call detail records it uses to bill its customers. The customer may use a reasonable sampling method. If the customer uses data for less than one month to determine the PSU given to the Company, the supporting summary sheet should explain why less than one month's data has been used, and whether the data provided is that which the customer uses to make its internal traffic forecasts and networking decisions. They must explain to the Company why and if they use the same data for their billing purposes. When a revised PSU varies by more than five percentage points from the last reported PSU, the Company may request an explanation. The customer shall retain for six months the data used in calculating a PSU given to the Company. Adjustment factors may be applied in the calculation of PSUs only if the factor has been objectively determined based on statistically reliable, Alaska specific data.

RECEIVED
MAR - 3 1997
ALASKA PUBLIC UTILITIES COMM.

GCI COMMUNICATION CORP.

ACCESS SERVICES

2. General Regulations (Cont'd)
   2.3 Obligations of the Customer (Cont'd)
      2.3.9 Jurisdictional Report Requirements (Cont'd)

(C) No prorating or back billing will be done based on the report. However, delayed charges will be billed utilizing the intrastate percentage that was in effect at the time the charges were incurred.

If the customer does not supply the reports the Company will assume the percentages to be the same as those provided in the last quarterly report. For those cases in which two consecutive quarterly reports have not been received from the customer, the Company may implement the following remedial actions: 1) the Company shall estimate what the correct PSU should be based upon available billing data; 2) the Company shall retain an Accounting Firm to review the records of the customer to the extent necessary to determine a proper PSU report. Expenses(s) incurred by the Company necessary to implement Step 2 will be billed to the customer; 3) the Company will report to the Alaska Public Utilities Commission any remedial action required.

(D) Jurisdictional Report Verification: If the Company disputes the reasonableness of the PSU provided as described in (A) above, or, either Company or the APUC questions the projected intrastate percentage, the Company will ask the customer to provide the data as described in (A) above that the customer used to determine the projected intrastate percentage. The customer shall supply the data within 15 days of the Company request. The customer shall keep records of call detail from which the percentage of intrastate and interstate use can be ascertained and upon request of the Company make the records available for inspection as reasonably necessary for purposes of verification of the percentages.

If the Company wishes to audit a PSU, it must request an audit within six months of having received the PSU. The audit would be limited to examination of billing tapes used in calculating the PSU and verification that the tapes accurately represent the carrier's traffic.

RECEIVED
MAR -3 1997
ALASKA PUBLIC UTILITIES COMM.

GCI COMMUNICATION CORP.

ACCESS SERVICES

2. General Regulations (Cont'd)
   2.3 Obligations of the Customer (Cont'd)
      2.3.9 Jurisdictional Report Requirements (Cont'd)

(E) Maintenance of Customer Records: For purposes of determining PSU, every call entering a customer switched network that originates at a point within the same state as that in which the called station is situated, is an intrastate communication, and every call entering the customer switched network that originates in a state other than that where the called station is situated is an interstate communication.

2.4 Payment Arrangements and Credit Allowance

2.4.1 Payment of Rates, Charges and Deposits

(A) The Company may require a deposit as a precondition of intrastate service as follows:

(1) Certificated Interexchange Carriers: A payment bond issued by a surety or letter of credit from a bank in a form acceptable to the Company in an amount equal to two and one half times the IC's estimated total monthly charges under this tariff may be required of all ICs. The failure of an IC to maintain such a payment bond may constitute reasonable grounds for terminating service to the IC. After an IC has received service for two months, the Company may authorize an adjustment in the amount of the payment bond based upon the IC's actual charges. Such adjustments may be made as often as is reasonably required to protect the revenue receipts and cash flow of the Company.

(2) Resellers: RESERVED FOR FUTURE USE.

(3) End Users: A cash deposit not to exceed the actual or estimated rates and charges for the service for a two month period (See Alaska Administrative Code 3 AAC 48.420) may be required of all end users. End User deposits retained by the Company will be refunded after a two-year period in accordance with Alaska Administrative Code 3 AAC 48.420.

INFORMATIONAL FILING ONLY

RECEIVED 06/24/21

ACCESS SERVICES

2. General Regulations (Cont'd)
   2.4 Payment Arrangements and Credit Allowance (Cont'd)
      2.4.1 Payment of Rates, Charges and Deposits (Cont'd)
         (A) (Cont'd)

The fact that a deposit has been made in no way relieves the customer from complying with the Company regulations as to the prompt payment of bills. At such time as the provision to the Customer is terminated, the amount of the deposit will be credited to the Customer's account and any credit balance which may remain will be refunded.

Cash deposits will be paid interest at the time the deposit is refunded. Deposits will be placed in an interest bearing account, and the Company will pay the Customer interest in accordance with AS 42.05.365.

(B) The Company will bill the customer who places the order for access service for all usage sensitive charges monthly in arrears. Nonrecurring charges will be billed to the customer ordering the service in the month following the provision of service.

The Company will bill in advance for: Special Access and Special Construction

The Company will bill in arrears for: Traffic Sensitive Charges, Nonrecurring Charges, Equal Access Recovery Charge, Toll Free Database Access Service Queries, Presubscription Change Charge, and TSP Database charge. (T)

(1) The bill date for all access services will be the 10th workday of the month for each Customer account and shall appear on the carrier access bill.

(2) Payment is due and payable upon receipt and shall be delinquent 20 calendar days from the date the bill is rendered, or by the next bill date, whichever is the shortest interval. Payments due Company of sums greater than $500.00 shall be made by wire transfer or Electronic Funds Transfer (EFT) directly to Company's bank account on or before the twentieth calendar day from the date the bill was rendered. If this due date is a local bank holiday, funds shall be wire transferred or EFT on the prior workday.

RECEIVED
MAR - 3 1997
ALASKA PUBLIC UTILITIES COMM.

GCI COMMUNICATION CORP.

ACCESS SERVICES

2. General Regulations (Cont'd)
   2.4 Payment Arrangements and Credit Allowance (Cont'd)
      2.4.1 Payment of Rates, Charges and Deposits (Cont'd)
         (B) (Cont'd)
            (2) (Cont'd)

Payments of $500.00 or less may be paid via check mailed in time to arrive at Company's office no later than the twentieth calendar day from the date the bill was rendered.

If EFT is technically not feasible, payment will be made by check mailed prior to the due date with "immediately available funds" as defined in Section 2.6 on the due date. Otherwise penalties as defined in Section 2.4.1 (B) apply.

(3) If payment is not received in immediately available funds by the due date as determine in (a) above, a one time one percent (1%) late payment, plus interest at the rate of .000287 per day, calculated on the total amount due will be charged and included as a separate item on the next statement issued to the customer.

(4) In the event that a billing dispute concerning charges billed to the customer by the Company occurs, the customer is required to pay both the disputed and undisputed amounts by the due date. If the dispute is resolved in favor of the customer, the billing entity will refund the disputed amount in question plus interest.

When a claim is filed within 90 days of the due date, the interest period shall begin on the payment date. When a claim is filed more than 90 days after the due date, the penalty interest period shall begin from the date of the claim or the date of overpayment, whichever is later. Interest will be calculated at a rate equal to .000287 per day, or the maximum interest allowed by state law. The lesser amount will apply. Applicable interest will be compounded daily.

(5) All actions by the Company to recover its charges, or any part thereof, shall be initiated within one year from the time the charges were incurred by the customer. For the purposes of this subsection, rendering an access bill to the customer is sufficient action.

RECEIVED
DEC 21 2018
STATE OF ALASKA
REGULATORY COMMISSION OF ALASKA

ACCESS SERVICES

2. General Regulations (Cont'd)
   2.4 Payment Arrangements and Credit Allowance (Cont'd)
      2.4.1 Payment of Rates, Charges and Deposits (Cont'd)
         (B) (Cont'd)

(6) In order for a customer to be eligible for recovery of overcharges of a disputed amount, notification must be submitted by the customer in writing to the Company within 18 months from the date that the bill under dispute was rendered.

(7) The terms "overcharges" or "disputed amounts", as used in Section 2.4.1(B)(6) preceding, shall be deemed to mean charges for service(s) in excess of those applicable thereto under other sections of this tariff.

(8) The term "notification", as used in 2.4.1(B)(6) preceding, shall mean written notice containing the date(s) of the overcharges(s), the service(s) for which the overcharges(s) accrued, and the amount(s) of the overcharge(s), delivered by Certified U.S. Mail to the billing entity business office, or its agent.

(9) If the customer does not receive a bill at least 10 days prior to the payment due date, then the bill shall be considered delayed. When the bill has been delayed, upon request of the customer the due date will be extended by the number of days the bill was delayed. Such request of the customer must be accompanied with proof of late bill receipt.

(10) The Essential Network Support (ENS) will be billed in arrears to the Alaska Universal Support Administrative Company. (N) (N)

RECEIVED

MAR - 3 1997

ALASKA PUBLIC UTILITIES COMM.

GCI COMMUNICATION CORP.

ACCESS SERVICES

2. General Regulations (Cont'd)
   2.4 Payment Arrangements and Credit Allowance (Cont'd)
      2.4.1 Payment of Rates, Charges and Deposits (Cont'd)

(C) Billing, Payment and Cutoff Illustration

In accordance with 2.4.1(B) and 2.1.8 the bill date, payment date, and cutoff dates are illustrated as follows:

Example: Calculation of Payment Dates

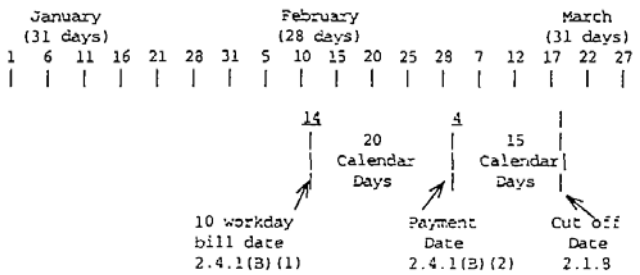

(D) For services provided on a monthly basis, the charge for the provision of a fractional month's service will be determined by dividing the number of days that service was provided by 30 and multiplying the result times the monthly rate. This calculation will be made subject to any minimum service periods required for specific services.

(E) When a rate as set forth in this tariff is shown to more than two decimal places, the charges will be determined using the rate shown. The resulting amount will then be rounded to the nearest penny (i.e., rounded to two decimal places).

RECEIVED
MAR - 3 1997
ALASKA PUBLIC UTILITIES COMM.

GCI COMMUNICATION CORP.

ACCESS SERVICES

2. General Regulations (Cont'd)
   2.4 Payment Arrangements and Credit Allowance (Cont'd)

   2.4.2 Minimum Periods

   (A) Unless a minimum service period is described for a specific tariff item, the minimum period for which services are provided and for which rates and charges are applicable is one month. When a service is discontinued prior to the expiration of the minimum period, the total charges at the rate level in effect at the time service is discontinued will apply for the remainder of the minimum period.

   If the discontinued service is provided based on usage, the Company will estimate usage to the end of the minimum period based on historical data.

   (B) Proration of Charges: Adjustments for the quantities of services established or discontinued in any billing period beyond the minimum period set forth for services in other sections of this tariff will be prorated to the number of days based on a 30 day month. The Company will, upon request, furnish within 30 days of a request and at no charge to the customer such detailed information as may reasonable be required for verification of any bill.

   2.4.3 Credit Allowance for Service Interruptions

   (A) General: A service is interrupted when it becomes unusable to the customer because of a failure of facilities used to furnish service under this tariff or in the event that the protective controls applied by the Company result in the complete loss of service by the customer. An interruption period starts when an inoperative service is reported to the Company, and ends when the service is operative. An allowance for interruption will apply only when the interruption is not due to the negligence of the customer. The credit allowance for an interruption or for a series of interruptions shall not exceed the monthly rate and minimum monthly usage charge for the service interrupted in any one monthly billing period.

RECEIVED
MAR - 3 1997
ALASKA PUBLIC UTILITIES COMM.

GCI COMMUNICATION CORP.

ACCESS SERVICES

2. General Regulations (Cont'd)
   2.4 Payment Arrangements and Credit Allowance (Cont'd)
      2.4.3 Credit Allowance for Service Interruptions (Cont'd)

(B) In case of an interruption to any service, allowance for the period of interruption, if not due to the negligence of the customer, shall be as follows:

(1) For Switched Access Service, no credit shall be allowed for an interruption of less than 24 hours. The customer shall be credited for an interruption of 24 hours or more at the rate of 1/30 of the applicable monthly rates or minimum monthly usage charge for each period of 24 hours or major fraction (12 hours and one minute) thereof that the interruption continues.

(2) For Digital Data Access, D1 through D4 and High Capacity, HC1, Special Access Services, any period during which the error performance is below that specified for the service will be considered as an interruption. The customer shall be credited for an interruption of 30 minutes or more at the rate of 1/1440 of the monthly charges for the facility or service for each period of 30 minutes or Major Fraction Thereof that the interruption continues.

(C) No credit allowance will be made for:

(1) Interruptions caused by the negligence of the customer.
(2) Interruptions of a service due to the failure of equipment or systems provided by the customer or others.
(3) Interruptions of a service during any period in which the Company is not afforded access to the premises where the service is terminated.
(4) Interruptions of a service when the customer has released that service to the Company for maintenance purposes, to make rearrangements, or for the implementation of a change order during the time that was negotiated with the customer prior to the release of the service. Thereafter, a credit allowance as set forth in (B) preceding applies.
(5) Periods when the customer elects not to release the service for testing and/or repair and continues to use in on an impaired basis.

RECEIVED
MAR - 3 1997
ALASKA PUBLIC UTILITIES COMM.

GCI COMMUNICATION CORP.

ACCESS SERVICES

2. General Regulations (Cont'd)
   2.4 Payment Arrangements and Credit Allowance (Cont'd)

   2.4.4 Title or Ownership Rights

   The payment of rates and charges by customers for the services offered under the provisions of this tariff does not assign, confer or transfer title or ownership rights to proposals or facilities developed or utilized, respectively, by the Company in the provision of such services.

   2.4.5 Re-establishment of Service Following Fire, Flood or Other Occurrence

   (A) Nonrecurring Charges do not apply for the re-establishment of service following a fire, flood or other occurrence attributed to an Act of God provided that:

   (1) The service is of the same type as was provided prior to the fire, flood or other occurrence.
   (2) The service is for the same customers.
   (3) The service is at the same location on the same premises.
   (4) The re-establishment of service begins within 60 days after Company service is available. (The 60 day period may be extended a reasonable period if the renovation of the original location on the premises affected is not practical within the allotted time period.

   (B) Nonrecurring Charges apply for establishing service at a different location on the same premises or at a different premises pending re-establishment of service at the original location.

   2.5 Connections

   Customer Premise Equipment and Systems may be connected with Switched and Special Access Service furnished by the Company where such connection is made in accordance with the provisions specified in Technical Reference Publication AS No. 1 and in 2.1 preceding.

RECEIVED
MAR - 3 1997
ALASKA PUBLIC UTILITIES COMM.

ACCESS SERVICES

2. General Regulations (Cont'd)

2.6 Definitions

Access Code: A uniform five or seven digit selection code assigned to an interexchange carrier. The five digit code has the form 10XXX, and the seven digit code has the form 950-1XXX or 950-0XXX.

Access Order: An order to provide the customer with Switched Access Service or Special Access Service or changes to existing services.

Access Minutes: The unit of usage of exchange facilities in intrastate service for the purpose of calculating chargeable usage. On the originating end of an intrastate call, usage is measured from the time the originating end user's call is delivered by the Company to and acknowledged as received by the customer's facilities connected with the originating exchange. On the terminating end of an intrastate call, usage is measured from the time the call is received by the end user in the terminating exchange. Timing of usage at both originating and terminating ends of an intrastate call shall terminate when the calling or called party disconnects, whichever event is recognized first in the originating and terminating end exchanges, as applicable.

Access Tandem: A Company or centralized equal access provider switching system that provides a concentration and distribution function for originating or terminating traffic between end offices and a customer designated premises. (See U-90-26, Orders No. 6, dated 12/6/90, and No. 9, dated 1/18/91, for installation and use of intrastate access tandems.)

Answer/Disconnect Supervision: The transmission of the switch trunk equipment supervisory signal (off-hook or on-hook) to the customer's point of termination as an indication that the called party has answered or disconnected.

Assumed Minutes of Use: Minutes of use assumed for, or allocated to, unmeasured intrastate interexchange communications services.

RECEIVED
MAR -3 1997
ALASKA PUBLIC UTILITIES COMM.

ACCESS SERVICES

2. General Regulations (Cont'd)
   2.6 Definitions (Cont'd)

Balance (100 Type) Test Line: An arrangement in an end office which provides for balance and noise testing.

Bona Fide Request: A good-faith written request by a competing certificated intrastate interexchange carrier to a local exchange carrier for equal access service.

Business Day: The times of day that a company is open for business. Business Day hours for the Company may be determined by contacting the business office.

Busy Hour Minutes of Capacity (BHMC): The customer specified maximum amount of Switched Access Service access minutes the customer expects to be handled in an end office switch during any hour in an 8:00 a.m. to 11:00 p.m. period for the Switched Access Service ordered. This customer furnished BHMC quantity is the input data the Company uses to determine the number of transmission paths for the Switched Access Service ordered.

Call: A customer attempt for which the complete address code (e.g., 0-, 911, or 10 digits) is provided to the serving dial tone office.

Carrier or Common Carrier: See Interexchange Carrier.

CCS: A standard unit of traffic load that is equal to 100 seconds of usage or capacity of a group of servers (e.g., trunks). Also known as "100 call seconds".

Central Office: A local Company switching system where Telephone Exchange Service customer station loops are terminated for purposes of interconnection to each other and to trunks.

Centrex CO Service: A service that (1) uses a portion of a Company switch located at the Company central office to meet the customer's internal needs and serves as the customer's interface with the local and interexchange networks and (2) links the customer's main stations to the Company switch with subscriber loops.

RECEIVED
MAR -3 1997
ALASKA PUBLIC UTILITIES COMM.

GCI COMMUNICATION CORP.

ACCESS SERVICES

2. General Regulations (Cont'd)
   2.6 Definitions (Cont'd)

Channel: A communications path between two or more points of termination.

Coin Stations: A location where Company equipment is provided in a public or semi-public place where Company customers can originate telephonic communications and pay the applicable charges by inserting coins into the equipment.

Common Line: A line, trunk, pay telephone line or other facility provided under the general and/or local exchange service tariffs of the Company, terminated on a central office switch. A common line-residence is a line or trunk provided under the residence regulations of the local exchange service tariffs. A common line-business is a line provided under the business regulations of the general and/or local exchange service tariffs.

Communications System: Channels and other facilities which are capable of communications between terminal equipment provided by other than the Company.

Customer Message: A completed intrastate call originated by a customer's end user. A customer message begins when answer supervision from the premise of the ordering customer is received by Company recording equipment indicating that the called party has answered. A message ends when disconnect supervision is received by Company recording equipment from either the premises of the ordering customer or the customer's end user premises from which the call originated.

Customer Designated Premises: The premises specified by the customer for the provision of Access Service.

Customer(s): Any individual, partnership, association, joint-stock company trust, corporation, or governmental entity or other entity which orders the services offered under this tariff, including Local Exchange Carrier(s), Interexchange Carriers(s) (IC's), and End User(s).

RECEIVED
FEB 13 2002
State of Alaska
Regulatory Commission of Alaska

GCI COMMUNICATION CORP.

ACCESS SERVICES

2. General Regulations (Cont'd)
2.6 Definitions (Cont'd)

Data Transmission (107 Type) Test Line: An arrangement which provides for a connection to a signal source which provides test signals for one-way testing of data and voice transmission parameters.

Dataphone: Private line digital service, typically with data rates at 2,400; 4,800; 9,600 (N)
and 56;000 bits per second. (N)

Dedicated Wholesale Service: Wholesale intrastate interexchange service that is not switched by the wholesale provider's equipment.

Detail Billing: The listing of each message and/or rate element for which charges to a customer are due on a bill prepared by the Company.

Effective 2-Wire: A condition which permits the simultaneous transmission in both directions over a channel, which does not insure independent information transmission in both directions. Effective 2-wire channels may be terminated with 2-wire or 4-wire interfaces.

Effective 4-Wire: A condition which permits the simultaneous independent transmission of information in both directions over a channel. The method of implementing effective 4-wire transmission is at the discretion of the Company (physical, time domain, frequency-domain separation or echo cancellation techniques).

End Office Switch: A local Company switching system where Telephone Exchange Service customer common lines are terminated for purposes of interconnection to trunks. Included are Remote Switching Modules and Remote Switching Systems served by a host office in a different wire center.

End User: Any customer of an intrastate telecommunications service that is not a carrier, except that a carrier shall be deemed to be an "end user" to the extent that such carrier uses a tele-communications service for administrative purposes, without making such service available to others, directly or indirectly.

Entry Switch: See First Point of Switching

RECEIVED

JUN 0 1 2010

STATE OF ALASKA
REGULATORY COMMISSION OF ALASKA

GCI COMMUNICATION CORP.

ACCESS SERVICES

2. General Regulations (Cont'd)
   2.6 Definitions (Cont'd)

Equal Access: A method of interconnection between a local exchange Company and all long distance carriers serving the exchange that allows an end user's interexchange calls to be automatically directed to the end user's chosen primary interexchange carrier when the end user dials 1-plus or any other abbreviated dialing arrangement authorized by the Commission. Equal Access requires local exchange carrier access service to be made available in equal kind, quality, and price to all interexchange carriers, and is commonly provided using Feature Group D signaling and interconnection arrangements. (D)

Exchange: A unit established by the Company for the administration of communications service in a specified area which usually embraces a city, town or village and its environs. It consists of one or more central offices together with the associated facilities used in furnishing communications service within that area. (D)

RECEIVED
FEB 21 2007
STATE OF ALASKA
REGULATORY COMMISSION OF ALASKA

GCI COMMUNICATION CORP.

ACCESS SERVICES

2. General Regulations (Cont'd)
   2.6 Definitions (Cont'd)

Feature Group A: A line-side connection for interexchange service that is accessed by the end user via a 7-digit telephone number that may vary with each exchange. (L)

Feature Group B: A trunk-side connection for interexchange service that is accessed by the end user by dialing "950-1XXX," with the "XXX" identifying the desired interexchange carrier.

Feature Group D: A trunk side switching connection designed for equal access provided through the use of end office or Commission approved access tandem switch trunk equipment. The access code for FGD switching is a uniform access code of the form "10XXX". When an end user has presubscribed, pursuant to Section 9.3.4, the form of the numbers dialed by the end user is NXX-XXXX, 0, or 1+NXX-XXXX, to use their chosen primary interexchange carrier.

First Point of Switching (FPOS): The first Company or centralized equal access provider location at which switching occurs on the terminating path of a call proceeding from the IC point of termination to the terminating end office and, at the same time, the last Company or centralized equal access provider location at which switching occurs on the originating path of a call proceeding from the originating end office to the IC point of termination. (L)

(L) Matter relocated from Original Page 39.

Pursuant to:
U-06-136(3)

Effective: February 16, 2007

Issued by: GCI Communication Corp.

By: Jennifer K.G. Robertson

Title: Tariffs & Licenses Manager

RECEIVED
MAR - 3 1997
ALASKA PUBLIC UTILITIES COMM.

ACCESS SERVICES

2. General Regulations (Cont'd)
   2.6 Definitions (Cont'd)

Host Office: An electronic switching system which provides call processing capabilities for one or more Remote Switching Modules or Remote Switching Systems.

Hub: A Company designated serving wire center at which bridging or multiplexing functions are performed. The bridging functions performed are to connect three or more customer designated premises in a multipoint arrangement. The multiplexing functions are to channelize analog or digital facilities to individual services requiring a lower capacity or bandwidth. NATIONAL EXCHANGE CARRIER ASSOCIATIONS, INC. TARIFF FCC No. 4 identifies serving wire centers, hub locations and the type of bridging or multiplexing functions available.

Immediately Available Funds: A corporate or personal check drawn on a bank account for which funds are available for use by the receiving party on the same day on which they are received and include U.S. Federal Reserve bank wire transfers, U.S. Federal Reserve notes (paper cash), U.S. coins and U.S. Postal Money Orders.

Incumbent Carrier: The Carrier, or its successor, certificated in commission Docket U-69-24 to provide intrastate interexchange telephone service.

Individual Case Basis: A condition in which the rates and charges for an offering under the provisions of this tariff are developed based on the circumstances in each case.

Interconnection Point: The point where facilities of the Company meet facilities of a connecting Exchange Company or Interexchange Carrier.

Interexchange Carrier (IC) or Interexchange Common Carrier: Any individual, partnership, association, joint-stock company, trust, governmental entity, or corporation engaged for hire in intrastate communication by wire, fiber, or radio between two or more exchanges.

Interstate Call: Any toll communications between two states subject to oversight by the Federal Communications Commission (FCC). The term denotes both interstate and foreign communications.

RECEIVED
MAR -3 1997
ALASKA PUBLIC UTILITIES COMM.

ACCESS SERVICES

2. General Regulations (Cont'd)
2.6 Definitions (Cont'd)

Intrastate Call: Any toll communications within a state subject to oversight by the state regulatory commission.

Line Side Connection: A connection of a transmission path to the line side of a local exchange switching system. This type of connection is used when providing FGA Switched Access Service.

Local Access and Transport Area: A geographic area established for the provision and administration of communications service. It encompasses one or more designated exchanges, which are grouped to serve common social, economic and other purposes.

Local Exchange Carrier (LEC): Any individual, partnership, association, cooperative, joint stock company, trust, or corporation engaged in Intrastate communication for hire by wire, radio, or other means within one or more exchanges.

Loop Around Test Line: An arrangement utilizing a Company central office to provide a means to make certain two-way transmission tests on a manual basis. This arrangement has two central office terminations, each reached by means of separate telephone numbers and does not require any specific customer premises equipment. Equipment subject to this test arrangement is at the discretion of the customer.

Message: See "Customer Message."

Milliwatt (102 Type) Test Line: An arrangement in an end office which provides a 1004 Hz tone at 0 dBm0 for one-way transmission measurements towards the customer's premises from the Company end office.

Net Salvage: The estimated scrap, sale, or trade-in value, less the estimated cost of removal. Cost of removal includes the costs of demolishing, or otherwise disposing of the material and any other applicable costs. Since the cost of removal may exceed salvage value, net salvage value may be negative.

RECEIVED
MAR - 3 1997
ALASKA PUBLIC UTILITIES COMM.

ACCESS SERVICES

2. General Regulations (Cont'd)
2.6 Definitions (Cont'd)

Network Control Signaling: The transmission of signals used in the telecommunications system which perform functions such as supervision (control, status, and charge signals), address signaling (e.g., dialing), calling and called number identifications, rate of flow, service selection error control and audible tone signals (call progress signals indicating re-order or busy conditions, alerting, coin denomination, coin collect and coin return tones) to control the operation of the telecommunications system.

Nonsynchronous Test Line: An arrangement in step-by-step end offices which provides operational tests which are not as complete as those provided by the synchronous test lines, but can be made more rapidly.

No-plus Dialing: A system of dialing where the calling party dials an interexchange call without dialing any prefix.

North American Numbering Plan: A three-digit area (NPA) code and a seven-digit telephone number made up of a three-digit Central Office code plus a four-digit station number.

Off-Hook: The active condition of Switched Access or a Telephone Exchange Service Line.

On-Hook: The idle condition of Switched Access or a Telephone Exchange Service line.

Open Circuit Test Line: An arrangement in an end office which provides an ac open circuit termination of a trunk or line by means of an inductor of several Henries.

Originating Direction: The use of access service for the origination of calls from an End User Premises to an IC Premises.

Pay Telephone: Company instruments and related facilities that are available to the general public for public convenience and necessity, including public and semi-public telephones, and coinless telephones.

RECEIVED
JUN 29 2007
STATE OF ALASKA
REGULATORY COMMISSION OF ALASKA

GCI COMMUNICATION CORP.

ACCESS SERVICES

2. General Regulations (Cont'd)
   2.6 Definitions (Cont'd)

Point of Termination: The point of demarcation within a customer-designated premises at which the Company's responsibility for the provision of Access Service ends. The point of demarcation shall be by mutual agreement of the Company and the IC.

Premises: A building or buildings on continuous property (except Railroad Right-of-Way, etc.) not separated by a public highway.

Presubscribed Carrier: The interexchange carrier selected by or assigned to an end user's access line through the presubscription process.

Presubscription: The process by which end users may select a primary interexchange carrier to handle toll calls for a particular access line on a no-plus, 0-plus, or 1-plus dialing basis. Depending upon availability, the end user may presubscribe to different ICs for interstate and intrastate calls.

(L)

(L)

(L) Matter Relocated to Original Page 43.01.

Pursuant to:
U-07-100(1)

Effective: August 8, 2007

Issued by: GCI Communication Corp.
By: Jennifer K.G. Robertson Title: Tariffs & Licenses Manager

RECEIVED
AUG 03 2010
STATE OF ALASKA
REGULATORY COMMISSION OF ALASKA

GCI COMMUNICATION CORP.

ACCESS SERVICES

2. General Regulations (Cont'd)
   2.6 Definitions (Cont'd)

Rate Sections: Below is a list of areas GCI services. The rates for those areas are contained in the following sections:

Anchorage, 13
Arctic Slope, 23 (D)
Copper Valley, 21 (D)
Cordova, 24 (N)
Eielson AFB, 15
Fairbanks, 14
Ft. Wainwright, 15
Glacier State, 18
Juneau, 15
Ketchikan, 17
Matanuska-Susitna, 16
Nome, Section 22
Seward, 19
Sitka, 20

Unless otherwise noted, the above areas are the Certificated Areas of the same name identified in the GCI Local Exchange Tariff No. 489 at pages 1 to 3.9. "Anchorage" above is the same as the "Anchorage Bird/Indian, Girdwood, and Hope" Certificated area as shown in that tariff.

RECEIVED
FEB 21 2007
STATE OF ALASKA
REGULATORY COMMISSION OF ALASKA

GCI COMMUNICATION CORP.

ACCESS SERVICES

2. General Regulations (Cont'd)
   2.6 Definitions (Cont'd)

(L)

Remote Switching Modules and/or Remote Switching Systems: Small, remotely controlled electronic end office switches which obtain all or part of their call processing capability from a Host Office. The Remote Switching Modules and/or Remote Switching Systems cannot accommodate direct trunks to an IC.

Registered Equipment: The customer's premises equipment which complies with and has been approved within the Registration Provisions of Part 68 of the FCC's Rules and Regulations.

Serving Wire Center: The wire center from which the customer designated premises would normally obtain dial tone from the Company.

Shortage of Facilities or Equipment: A condition which occurs when the Company does not have appropriate cable, switching capacity, bridging or multiplexing equipment, etc., necessary to provide the Access Service requested by the customer.

Short Circuit Test Line: An arrangement in an end office which provides for an ac short circuit termination of a trunk or line by means of a capacitor of at least four microfarads.

(L)

(L) Matter relocated from Original Sheet No. 43.

RECEIVED
MAR - 3 1997
ALASKA PUBLIC UTILITIES COMM.

ACCESS SERVICES

2. General Regulations (Cont'd)
   2.6 Definitions (Cont'd)

Signaling Point (SP): The term "Signaling Point (SP)" denotes an SS7 network interface element capable of Originating and terminating SS7 trunk signaling messages.

Service Switching Point (SSP): A Service Switching Point denotes an end office or tandem which, in addition to having SS7 and SP capabilities, is also equipped to query centralized data bases.

Signaling System 7 (SS7): The term "Signaling System 7 (SS7)" denotes the layered protocol used for standardized common channel signaling in the United States and Puerto Rico.

Signal Transfer Point (STP): The term "Signal transfer Point (STP)" denotes a packet switch which provides access to the Company's SS7 network and performs SS7 message signal routing and screening.

Signal Transfer Point (STP) Port: The term "Signal Transfer Point (STP Port" denotes the point of termination and interconnection to the STP.

Special Access: See Section 7.

Switched Access: See Section 6.

Synchronous Test Line: An arrangement in an end office which performs marginal operational tests of supervisory and ring-tripping functions.

Telecommunications Service Priority (TSP): The Telecommunications Service Priority System replaces the previous Restoration Priority (RP) System and provides priority treatment for National Security Emergency Preparedness Services critical for maintaining a state of readiness or responding to and managing any event or crisis which causes or could cause harm to the population, damage to property or a threat to the security of the United States.

Terminating Direction: The use of Access Service for the completion of calls from an IC premises to an End User Premises.

RECEIVED
MAR - 3 1997
ALASKA PUBLIC UTILITIES COMM.

ACCESS SERVICES

2. General Regulations (Cont'd)
   2.6 Definitions (Cont'd)

Termination Liability: The amount which will be billed if services using specially constructed facilities are terminated prior to the expiration of the Termination Liability Period.

Transmission Measuring (105 Type) Test Line: An arrangement in an end office which provides far-end access to a recorder and permits two-way loss and noise measurements to be made on trunks from a near end office.

Transmission Path: An electrical path capable of transmitting signals within the range of the service offering, e.g., a voice grade transmission path is capable of transmitting voice frequencies within the approximate range of 300 to 3000 Hz. A transmission path is comprised of physical or derived facilities consisting of any form or configuration of plant typically used in the telecommunications industry.

Trunk: A communications path connecting two switching systems in a network, used in the establishment of an end-to-end connection.

Trunk Group: A set of trunks which are traffic engineered as a unit for the establishment of connections between switching systems in which all of the communications paths are interchangeable.

Trunk Side Connection: The connection of a transmission path to the trunk side of a local exchange switching system. This type of connection is used when providing FGB, FGC, or FGD Switched Access Service.

Two-Wire to Four-Wire Conversion: An arrangement which converts a four-wire transmission path to a two-wire transmission path to allow a four-wire facility to terminate in a two-wire entity (e.g., a central office switch).

Uniform Service Order Code (USOC): A three or five character alphabetic, numeric, or an alphanumeric code that identifies a specific item of service or equipment. Uniform Service Order Codes are used in the Company billing system to generate recurring rates and nonrecurring charges.

RECEIVED
MAR -3 1997
ALASKA PUBLIC UTILITIES COMM.

ACCESS SERVICES

2. General Regulations (Cont'd)
2.6 Definitions (Cont'd)

V and H Coordinates Method: A method of computing airline miles between two points by utilizing an established formula which is based on the vertical and horizontal coordinates of the two points.

WATS Serving Office: The term WATS Serving Office (WSO) denotes a Company-designated serving wire center where switching and/or screening and/or recording functions are performed for WATS/800 or WATS-type services.

Wire Center: A building in which one or more central offices, used for the provision of Telephone Exchange Services, are located.

Wholesale Provider: A certificated intrastate interexchange carrier that has an approved and published tariff for providing wholesale service to other intrastate carriers.

Wholesale User: A certificated intrastate interexchange carrier that uses the transport facilities of another intrastate carrier to access the Company's facilities.

0-Plus Dialing: A method of dialing for an operator-assisted call where the calling party dials "0" plus the phone number, an operator comes on the line, and the caller states the type of call being attempted. This dialing pattern is used for collect, credit-card, person-to-person, and third-party billed calls.

1-PIC Dialing: End user access to the same presubscribed carrier for both interstate and intrastate calling.

1-Plus Dialing: A system of dialing where the calling party dials the prefix "1" prior to the telephone number for an interexchange call.

2-PIC Dialing: A system of dialing where the end user may select, for each access line, an intrastate interexchange carrier that is different from the end user's presubscribed interstate interexchange carrier.

RECEIVED
MAY 23 1997
ALASKA PUBLIC UTILITIES COMM.

ACCESS SERVICES

2. General Regulations (Cont'd)

2.7 Audit Provisions

Upon 30 days written notice (or such shorter period as the parties may mutually agree upon), the Company or the customer, or their authorized representatives, shall have the right to examine and audit each other, during normal business hours and at reasonable intervals, as determined by the party undergoing the audit, all such records and accounts in possession of the other, which contain information bearing upon the determination of the amounts payable to the Company by the customer or amounts payable to the customer by the Company. The maximum period any such audit shall encompass is 24 months, or the period from the most recent audit, whichever is less.

No claim or demand with respect to any audit may be made by the Company or the customer more than two years after the date of the event which gave rise to the claim or demand, except as provided for in 2.4.1(B)(5) or (6) preceding.

The Company and each customer which receives funds from or makes payment to the Company shall keep and maintain detailed records of all payments to and receipts from the Company so as to permit an accounting by any affected party or by the APUC.

Record retention for all matters applicable to the audits and reviews will be as required by law, and/or regulatory requirements; the retention will be in conformance with the practices established by the Company, subject to the direction of the APUC.

2.8 Dispute Resolution

2.8.1 Who May Initiate a Dispute

The Company and any customer which participates in a service provided under this tariff may initiate a dispute under the following dispute resolution procedure.

2.8.2 Jurisdictional Limitation

(A) Disputes Beyond Scope of This Procedure: The following issues are beyond the scope of this procedure and may not be presented to the Company for resolution:

RECEIVED
MAR - 3 1997
ALASKA PUBLIC UTILITIES COMM.

GCI COMMUNICATION CORP.

ACCESS SERVICES

2. General Regulations (Cont'd)
   2.8 Dispute Resolution (Cont'd)
      2.8.2 Jurisdictional Limitation (Cont'd)
         (A) Disputes Beyond Scope of This Procedure (Cont'd)

(1) The rates for services set forth in this tariff;

(2) The ratios and factors as determined or developed by the APUC;

(3) Any matter that involves resolving the accuracy of data provided by the IC relating to the determination of an IC's market share;

(4) Any matter exclusively reserved to the Alaska Public Utilities Commission by statute, administrative regulation or tariff provisions.

(B) Disputes Within Scope Of This Procedure: Any matter not beyond the scope of this procedure may be submitted to the Company under this procedure.

2.8.3 Initiation of Disputes

Any aggrieved entity (hereafter "Disputant") may initiate a dispute by serving on the Company a written statement setting forth the nature of the dispute and the specific relief requested. In the event the dispute involves an entity other than or in addition to the Company itself, the Disputant shall simultaneously serve a copy of the written statement on all other affected entities.

2.8.4 Investigation of Dispute

The Company shall conduct such investigation into the dispute as it deems reasonable and appropriate. The investigation may be conducted informally, and shall be directed to a fair and expeditious resolution of any legitimate dispute

RECEIVED
MAR -3 1997
ALASKA PUBLIC
UTILITIES COMM.

GCI COMMUNICATION CORP.

ACCESS SERVICES

2. General Regulations (Cont'd)
   2.8 Dispute Resolution (Cont'd)

   2.8.5 Resolution of Dispute by the Company

   The Company shall render a written determination within 30 days of the submission date of the dispute. In the event the Company fails to render a written decision within this 30 day period, the dispute shall be deemed to have been denied.

   2.8.6 Right to File Complaint With The Commission

   Nothing in this dispute resolution procedure shall deprive the Disputant of its right to file a complaint with the Alaska Public Utilities Commission, either in the first instance, or as an appeal from a resolution entered as a result of the procedures set forth in the Company tariff.

RECEIVED
DEC 21 2018
STATE OF ALASKA
REGULATORY COMMISSION OF ALASKA

GCI COMMUNICATION CORP.

ACCESS SERVICES

3. CARRIER COMMON LINE ACCESS SERVICE

3.1 General Description

Carrier Common Line Access provides for the use of Telephone Company common lines for the Origination or Termination of any Intrastate Toll Telecommunications.

Carrier Common Line Access is provided where the Telephone Company's end users subscribe to local exchange telephone service.

Effective January 1, 2019, the Carrier Common Line rate element has been (N)
eliminated, and is designated as Essential Network Support (ENS). (N)

3.2 Definitions

Reserved for future use.

RECEIVED
JUN 17 2011
STATE OF ALASKA
REGULATORY COMMISSION OF ALASKA

GCI COMMUNICATION CORP.

ACCESS SERVICES

3. CARRIER COMMON LINE ACCESS SERVICE (Cont'd)

3.3 Limitations

Reserved for future use.

3.4 Undertaking of the Telephone Company

Where the IXC is provided with Switched Access Service under other sections of this tariff, the Company will provide the use of the Company's common lines by an IXC for access to end users. Carrier Common Line (CCL) rates and charges are set forth in the various Rate Sections (as defined in Section 2.6). (C)

3.5 Obligations of the Customer

(A) Any Switched Access Service associated with Carrier Common Line Access shall be ordered under other sections of this tariff.

RECEIVED
DEC 21 2018
STATE OF ALASKA
REGULATORY COMMISSION OF ALASKA

GCI COMMUNICATION CORP.

ACCESS SERVICES

3. CARRIER COMMON LINE ACCESS SERVICE (Cont'd)

3.5 Obligations of the Customer (Cont'd)

(B) The IXC facilities at the premises of the ordering IXC shall provide the necessary on-hook and off-hook supervision.

3.6 Reserved for Future Use (D)

(D)
|
(D)

RECEIVED
DEC 21 2018
STATE OF ALASKA
REGULATORY COMMISSION OF ALASKA

GCI COMMUNICATION CORP.

ACCESS SERVICES

3. CARRIER COMMON LINE ACCESS SERVICE (Cont'd)

3.7 Rate Regulation

(A) The Carrier Common Line Access Charge will be billed as Essential Network Support (ENS) to the Alaska Universal Service Administrative Company (AUSAC) under this tariff in accordance with the regulations as set forth below. D N

(B) Annual Essential Network Support (ENS) in an amount equal to the amount of carrier common line support received for the year ended December 31, 2016. The ENS amount is frozen at that level. The Monthly rate will be determined by dividing the annual amount by twelve.

(C) The Monthly Rate is $169,037.25 N

(D) The Company will continue to use the frozen Essential Network Support amount, to be recovered from AUSAC pursuant to this tariff, in calculating the monthly ENS payable under this tariff until it is superseded by a subsequent order of the RCA. D

RECEIVED
DEC 21 2018
STATE OF ALASKA
REGULATORY COMMISSION OF ALASKA

GCI COMMUNICATION CORP.

ACCESS SERVICES

Reserved For Future Use (D)

(D)

RCA No. 489 3rd Revised Sheet No. 50.5

Canceling

2nd Revised Sheet No. 50.5

RECEIVED
JUN 17 2011
STATE OF ALASKA
REGULATORY COMMISSION OF ALASKA

GCI COMMUNICATION CORP.

ACCESS SERVICES

Reserved for Future Use (D)

(D)

Tariff Advice No. 553-489, Pursuant to R-08-003(9) Effective: August 1, 2011

Issued by: GCI Communication Corp.

By: Cynthia L. Lynch Title: Tariffs and Licenses Manager

RCA No. 489 1st Revised Sheet No. 50.6

Canceling

Original Sheet No. 50.6

RECEIVED
JUN 17 2011
STATE OF ALASKA
REGULATORY COMMISSION OF ALASKA

GCI COMMUNICATION CORP.

Reserved For Future Use (D)

(D)

Tariff Advice No. 553-489, Pursuant to R-08-003(9) Effective: August 1, 2011

Issued by: GCI Communication Corp.

By: Cynthia L. Lynch Title: Tariffs and Licenses Manager

RECEIVED
MAR 0 8 2007
STATE OF ALASKA
REGULATORY COMMISSION OF ALASKA

GCI COMMUNICATION CORP.

ACCESS SERVICES

4. End User Access Service

4.1 General Description

This section is to define the relationship of the End User as related to access service.

The Company will provide end-user access service to End Users who obtain local exchange service from the Company under its local exchange tariffs and End Users who obtain intrastate WATS service.

End User Access provides for the use of an End User Common Line (EUCL) and an intrastate WATS service by an end user.

The company will provide the following End User Access rate elements at rates and charges forth in the Rate Sections (as defined in Section 2.6, Rate Sections): (N)

a. Network Access Fee (NAF)

The NAF is expressed in dollars and cents per line per month and will be assessed upon end-users that subscribe to any switched local exchange telephone service, including Centrex service and pay telephone line service. The NAF shall be assessed for each line between the premises of an end-user, or pay telephone, and a Class 5 office that is or may be used for local exchange service transmissions.

RECEIVED
NOV 29 2004
State of Alaska
Regulatory Commission of Alaska

GCI COMMUNICATION CORP.

ACCESS SERVICES

4. End User Access Service

4.2 Limitations (L)

4.2.1 A telephone number is not provided with End User Access.

4.2.2 Detail billing is not provided with End User Access.

4.2.3 Directory listings are not included with End User Access.

4.2.4 Intercept arrangements are not included with End User Access.

4.3 Undertaking of the Company

4.3.1 The Company will provide the use of a EUCL for access to intrastate access services when the End User obtains local telephone exchange service, or an intrastate WATS service.

4.3.2 The Company will be responsible for contacts and arrangements with end users. (L)

(L) Matter relocated from Original Page 51.

RECEIVED
MAR - 3 1997
ALASKA PUBLIC UTILITIES COMM.

GCI COMMUNICATION CORP.

ACCESS SERVICES

4. End User Access Service (Cont'd)

4.4 Payment Arrangements and Credit Allowance

4.4.1 Minimum Period

The minimum period for which EUCL End User Access is provided is the same as that of the service with which it is associated

(A) Those EUCL's associated with a local exchange telephone service will have the same minimum period as described in the exchange tariff for the associated service.

(B) Those EUCL's associated with an intrastate WATS Access Line will have the same minimum period as described in the state tariff for intrastate WATS service.

4.4.2 Cancellation of Application

End User Access is canceled when the order for the associated service is canceled. No cancellation charges apply.

4.4.3 Changes to Orders

When changes are made to orders for local exchange service or the intrastate WATS access line associated with End User Access any necessary changes will also be made for End User Access. No charges will apply.

4.4.4 Allowance for Interruptions

When End User Access Service is interrupted, the credit allowance for interruptions as set forth in 2.4.3 preceding applies.

RECEIVED
MAR - 3 1997
ALASKA PUBLIC UTILITIES COMM.

ACCESS SERVICES

5. Ordering Options for Switched and Special Access Service

5.1 General

This section sets forth the order related regulations and charges for Switched and Special Access Services. These regulations and charges are in addition to other applicable regulations and charges as set forth in other sections of this tariff.

5.1.1 Ordering Conditions

A customer may order any number of services of the same type and between the same premises on a single Access Order.

The customer shall provide all information necessary for the Company to provide and bill for the requested service. In addition to the order information required in 5.2 following, the customer must also provide:

- Customer name and premises address(es).

- Billing name and address (when different from customer name and address).

- Customer contact name(s) and telephone number(s) for the following provisioning activities:

1. order negotiation
2. order confirmation
3. interactive design
4. installation
5. billing

Service Installations: The Company will provide the Access Service in accordance with the customer's requested service date, subject to the constraints established by the Company schedule of applicable service dates.

RECEIVED
FEB 21 2007
STATE OF ALASKA
REGULATORY COMMISSION OF ALASKA

GCI COMMUNICATION CORP.

ACCESS SERVICES

5. Ordering Options for Switched and Special Access Service (Cont'd)

5.1 General (Cont'd)

5.1.2 Provision of Other Services

Other services as described in 9.1 and 9.2 may be ordered in conjunction with the order for Access Service. All rates and charges set forth in Exchange Carrier Rate Sheets as set forth in the various Rate Sections (as defined in Section 2.6) for additional engineering, additional labor and miscellaneous services will apply in addition to the rates and charges for the Access Service with which they are associated. (C)

5.1.3 Expedited Orders

A customer may request an expedited service date. When this situation occurs, charges will be applicable as set forth in Section 9. The Company will provide an estimate of the charges to the customer. The customer must accept the price estimate prior to the Company's performing the expedite. The actual charges billed to the customer will be no more than 10 percent over the estimate.

To develop, determine and bill the customer the extraordinary costs which may be involved, the Special construction terms and conditions as set forth in Section 10 will be used by the Company.

5.2 Access Order

An Access Order is used by the Company to provide a customer Access Service as follows:

- Switched Access Service as set forth in Section 6.
- Special Access Service as set forth in Section 7.
- WATS Access Line as set forth in Section 6.
- Other Services as set forth in Section 9.

RECEIVED
MAR -3 1997
ALASKA PUBLIC UTILITIES COMM.

ACCESS SERVICES

5. Ordering Options for Switched and Special Access Service (Cont'd)
5.2 Access Order (Cont'd)

5.2.1 Feature Group A

Orders for Feature Group A Switched Access Service shall be in lines.

When placing an order for Feature Group A Switched Access Service, the customer shall provide the following information in addition to that set forth in 5.1 preceding:

- The number of lines and the first point of switching (i.e., Dial Tone Office)
- Optional Features
- Whether the Off-hook Supervisory Signaling is provided by the customer's equipment before the called party answers, or is forwarded by the customer's equipment when the called party answers
- Lines to be provided as single lines
- Lines to be arranged in multiline hunt group arrangements
- Directionality (1-way, 2-way, etc.)
- A projected percentage of interstate use (PIU)
- The Interexchange Carrier to which the service is connected or, in the alternative, specify the means by which the FGA access communications are transported.

5.2.2 Feature Group B

Orders for Feature Group B Switched Access Service shall be in trunks.

When placing an order for Feature Group B Service, the customer shall provide, the following information in addition to that set forth in 5.1 preceding:

- The number of trunks
- The end office when direct routing is desired
- The access tandem office when FGB is provided through a centralized equal access arrangement
- Optional Features
- Trunks to be provided as single trunks
- Trunks to be arranged in trunk group arrangements

RECEIVED
MAR - 3 1997
ALASKA PUBLIC UTILITIES COMM.

ACCESS SERVICES

5. Ordering Options for Switched and Special Access Service (Cont'd)
   5.2 Access Order (Cont'd)
      5.2.2 Feature Group B (Cont'd)

- Directionality (1-way, 2-way, etc.)
- A projected percentage of interstate use (PIU)
- The Interexchange Carrier to which the service is connected or, in the alternative, specify the means by which the FGB access communications are transported
- The access code dialing arrangement (i.e., a uniform access code of 950-1XXX or 950-0XXX or an Abbreviated Dialing Arrangement (ADA) access code of N or NX)

5.2.3 Feature Group D and Interim NXX Translation

When placing an order for Feature Group D Switched Access Service, the customer shall provide:

- The number of BHMC from the customer designated premises to the end office by Feature Group and by type of BHMC, or
- The number of trunks desired between customer designated premises and an entry switch
- Optional Features
- Interim NXX Translation options

When BHMC information is provided it is used to determine the number of transmission paths as set forth in 6.6.5 following.

The BHMC may be determined by the customer in the following manner. For each day (8 am to 11 pm, Monday through Friday, excluding national holidays), the customer shall determine the highest number of minutes of use for a single hour (e.g., 55 minutes in the 10-11 am hour). The customer shall, for the same hour period (i.e., busy hour) for each of twenty consecutive business days, pick the twenty consecutive business days in a calendar year which add up to the largest number of minutes of use. Both originating and terminating minutes shall be included. The customer shall then determine the average busy hour minutes of capacity (i.e., BHMC by dividing the

RECEIVED
MAR 0 8 2007
STATE OF ALASKA
REGULATORY COMMISSION OF ALASKA

GCI COMMUNICATION CORP.

ACCESS SERVICES

5. Ordering Options for Switched and Special Access Service (Cont'd)
   5.2 Access Order (Cont'd)
      5.2.3 Feature Group D and Interim NXX Translation (Cont'd)

larger number of minutes of use figure for the same hour period for the consecutive twenty business day period by 20. This computation shall be performed for each end office the customer wishes to serve. These determinations thus establish the forecasted BHMC for each end office.

Customers may at their option, order FGD by specifying the number of trunks desired between customer designated premises and an end office or access tandem. When ordering by trunk quantities rather than BHMC quantities to an access tandem, the customer must also provide the Company an estimate of the amount of traffic it will generate to and/or from each end office subtending the access tandem to assist the Company in its own efforts to project further facility requirements.

When Feature Group D is ordered with the Interim NXX Translation optional feature, the customer shall specify the Service Access Code(s) (e.g. 900) and their associated NXX code(s). The initial and subsequent orders to add, change or delete Interim NXX Translation codes shall be placed separately or in combination with orders to change Feature Group D Switched Access BHMC or trunks. Customer assigned NXX codes which have not been ordered will be blocked.

Orders for the Interim NXX Translation optional feature shall not be required until such time as a customer requests Interim NXX Translation of Service Access Codes. Upon receipt of such order, the Company shall notify the MTS/WATS provider of the activation of the Interim NXX Translation Service for the Service Access Code. Following such initial activation, all customers are required to place orders for Interim NXX Translation of the Service Access Code and the Interim NXX Translation charge for the Service Access Code shall apply as set forth in the Rate Sections (as defined in Section 2.6, Rate Sections). (N) (N)

Wholesale users are required to order access from each Company where they intend to originate or terminate calls. The access service request must identify the provider. The wholesale provider is responsible for specifying trunking requirements for switched wholesale service. The wholesale user is responsible for specifying trunking requirements for dedicated wholesale service.

INFORMATIONAL FILING ONLY

RECEIVED 06/24/21

ACCESS SERVICES

5. Ordering Options for Switched and Special Access Service (Cont'd)

5.2 Access Order (Cont'd)

5.2.4 Special Access Service may be ordered for connection with FGD Switched Access Service at Company-designated WATS Service Offices (WSOs) for the provision of WATS or WATS-type services and may be ordered separately by a customer other than the customer which orders the FGD Switched Access Service.

For the Special Access Service, the customer shall specify the customer designated premises at which the Special Access Service terminates, the type of line (i.e., two-wire or four-wire), the type of calling (i.e., originating, terminating, or two-way) and the type of supervisory signaling. When the optional screening, switching and/or recording functions are not provided at the customer's serving wire center, Channel Mileage Facility as set forth in 7.2.1 following, must be ordered between that wire center and the nearest WSO where the screening, switching and/or recording functions can be provided.

5.2.5 For Toll Free Database Access Service, as described in 6.2 following, the customer must order FGD to those access tandems or end offices designated as (T)
Service Switching Points (SSP) for Toll Free Database Service or to those non-SSP
equipped end offices that can accommodate direct trunking of originating Toll Free (T)
calls. SSP equipped end offices, access tandems and non-SSP equipped end offices (T)
that can accommodate direct trunking of originating Toll Free calls are designated in
NATIONAL EXCHANGE CARRIER ASSOCIATION, INC. TARIFF FCC No. 4, (T)
WIRE CENTER INFORMATION. All traffic originating from end offices not
equipped to provide SS7 signaling and routing and not able to accommodate direct
trunking of originating Toll Free calls requires routing via an access tandem where
SSP functionality is available. (T)

5.3 Reserved for Future Use

RECEIVED
MAR - 3 1997
ALASKA PUBLIC
UTILITIES COMM.

ACCESS SERVICES

5. Ordering Options for Switched and Special Access Service (Cont'd)

5.4 Access Order Service Intervals

To the extent the Access Service can be made available with reasonable effort, the Company will provide Access Service in accordance with the customer's requested interval. The Company is not responsible for any delays caused by any other connecting exchange Company in the provision of service to the customer's point of termination. If in order to meet the customer's requested service date, work must be performed outside scheduled work hours, Additional Labor charges as described in Section 9 will apply.

5.5 Access Order Modifications

The customer may request a modification of its Access Order prior to the service date. The Company will make every effort to accommodate a requested modification when it is able to do so with the normal work force assigned to complete such an order within normal business hours. If the modification cannot be made with the normal work force during normal business hours, the Company will notify the customer that additional labor and/or engineering charges will apply. If the customer still desires the Access Order modification and agrees to any additional charges which may apply, the Company will schedule a new service date. Additional labor or engineering charges as described in Section 9 will apply.

5.5.1 Service Date Change

Access Order service dates may be changed, but the new service date may not exceed the original service date by more than 30 calendar days. If the customer requested service date is more than 30 calendar days after the original service date, the order will be canceled by the Company and reissued. The appropriate cancellation charges as set forth in 5.6 will apply. If the Company determines it can accommodate the customer's request with the normal work force during normal business hours and without delaying service dates for orders of other customers, a new service date may be established that is prior to the original service date. No additional charges will apply.

RECEIVED
MAR - 3 1997
ALASKA PUBLIC UTILITIES COMM.

ACCESS SERVICES

5. Ordering Options for Switched and Special Access Service (Cont'd)
   5.5 Access Order Modifications (Cont'd)
      5.5.1 Service Date Change (Cont'd)

If the requested service date is changed to an earlier date, and the Company determines additional labor or extraordinary costs are necessary to meet the request, the customer will be notified by the Company that Additional Labor Charges as described in Section 9 may apply.

5.5.2 Change in Lines or Capacity

Any increase in the number of Special Access Service channels or Switched Access Service busy hour minutes of capacity will be treated as a new Access Order (for the increased amount only).

Any decrease in the number of ordered Special Access Service channels or Switched Access Service busy hour minutes of capacity will be treated as a partial cancellation and the charges as set forth in 5.6 following will apply.

5.6 Cancellation of an Access Order

5.6.1 A customer may cancel an Access Order for the installation of service on any date prior to the service date. The cancellation date is the date the Company receives written or verbal notice from the customer that the order is to be canceled. The verbal notice must be followed by written confirmation within 10 days. If the customer is unable to accept the Access Service within 30 days after the service date, at the customer's option, service will be canceled and charges set forth in 5.6.2 following will apply, or billing for the access service will commence on the 31st day after the service date.

5.6.2 When a customer cancels an Access Order, a Cancellation Charge will apply as follows:

RECEIVED
MAR - 3 1997
ALASKA PUBLIC UTILITIES COMM.

ACCESS SERVICES

5. Ordering Options for Switched and Special Access Service (Cont'd)
   5.6 Cancellation of an Access Order (Cont'd)
   5.6.2 (Cont'd)

(A) Installation of Switched or Special Access Service facilities is considered to have started when the Company incurs any cost in connection with the installation. Where installation of access facilities has been started prior to the cancellation, the charges specified in (1) or (2) following, whichever is greater, shall apply.

(1) A charge equal to the nonrecoverable cost of equipment and material ordered, provided or used, plus the nonrecoverable cost of installation and removal including the costs of engineering, labor, supervision, transportation, right-of-way and other associated costs less actual net salvage received after disposal of facilities.

(2) The charge for the minimum period of Switched or Special Access Service ordered by the customer.

(B) Where the customer cancels an Access Order prior to the start of installation of access facilities, no charges shall apply.

5.7 Selection of Facilities for Access Orders

The Company will make a reasonable effort to accommodate a customer request for a specific transmission path.

5.8 Charges Associated with Access Ordering

5.8.1 Access Order Charge

The Access Order Charge is applied to all customer requests for new Special and Switched Access Service and Directory Assistance Service. In addition, the Access Order Charge is applicable to customer requests for additions, changes or rearrangements to existing Special and Switched Access Service and Directory Assistance Service with the following exceptions:

RECEIVED
FEB 21 2007
STATE OF ALASKA
REGULATORY COMMISSION OF ALASKA

ACCESS SERVICES

5. Ordering Options for Switched and Special Access Service (Cont'd)
   5.8 Charges Associated with Access Ordering (Cont'd)
      5.8.1 Access Order Charge (Cont'd)

The Access Order Charge does not apply:

- When a Service Date Change Charge is applicable.
- When a Design Change Charge is applicable.
- To administrative changes as set forth in 6.8.1(A) and 7.2.2(C)(3) following.
- When a change to a pending order does not result in the cancellation of the pending order and the issuance of a new order.
- When a Miscellaneous Service Order charge is applicable.
- When a Presubscription Charge is applicable.
- When a Company initiated network reconfiguration requires a customer's existing access service to be reconfigured.

The Access Order Charge will be applied on a per order basis to each order received by the Company or copy of an order received by the Company pursuant to 5.2 preceding, except by the Company applying the Interim NXX Translation charge, and is in addition to order applicable charges as set forth in this and other sections of this tariff.

5.8.2 Miscellaneous Service Order Charge

A Miscellaneous Service Order Charge, as set forth the various Rate Sections (as (C)
defined in Section 2.6) applies to any service, or combination of services ordered (C)
simultaneously from Section 9 of the Tariff for which a service order is not already pending (with the exception of Presubscription 9.3.4 which does not have the charge applied). The Miscellaneous Service Order Charge is an administrative charge designed to compensate for the expenses associated with service order issuance.

RECEIVED
MAR - 3 1997
ALASKA PUBLIC UTILITIES COMM.

ACCESS SERVICES

5. Ordering Options for Switched and Special Access Service (Cont'd)
   5.8 Charges Associated with Access Ordering (Cont'd)
      5.8.2 Miscellaneous Service Order Charge (Cont'd)

The charge always applies to the following services since a pending service order would not exist:

- Overtime Repair (9.2.2),
- Standby Repair (9.2.3),
- Testing and Maintenance with Other Telephone Companies other than when in conjunction with Acceptance Testing (9.2.4),
- Other labor (9.2.6),
- Maintenance of Service (9.3.2),
- Unauthorized PIC Change (XXXXX).

The Miscellaneous Service Order Charge will also apply to the following services if they are ordered subsequent to the initial installation of the associated access service, thereby necessitating the issuance of another service order:

- Telecommunications Service Priority (9.3.3). The charge does not apply to the following services since there would exist a pending service order:
- Additional Engineering (9.1),
- Overtime Installation (9.2.3),
- Standby Acceptance Testing (9.2.3),
- Testing and Maintenance with Other Telephone Companies when in conjunction with Acceptance Testing (9.3.4),
- Additional Cooperative Acceptance Testing (9.3.1(A)(1)) and (9.3.1(B)(1)).

5.8.3 Access Order Change Charges

Access Order changes involve service date changes and design changes. The customer may request a change of its Access Order prior to the service date. The Company will make every effort to accommodate a requested change when it is able to do so with the normal work force assigned to complete such an order within normal business hours.

RECEIVED
FEB 21 2007
STATE OF ALASKA
REGULATORY COMMISSION OF ALASKA

GCI COMMUNICATION CORP.

ACCESS SERVICES

5. Ordering Options for Switched and Special Access Service (Cont'd)
   5.8 Charges Associated with Access Ordering (Cont'd)
      5.8.3 Access Order Change Charges (Cont'd)

If the change cannot be made with the normal work force during normal business hours, the Company will notify the customer. If the customer still desires the Access Order change, the Company will schedule a new service date as set forth in 5.1 preceding. All charges for Access Order change as set forth in the various Rate Sections (as defined in Section 2.6), will apply on a per occurrence basis. (C) (C)

Any increase in the number of Special Access Service channels or Switched Access Service lines, trunks or busy hour minutes of capacity will be treated as a new Access Order (for the increased amount only).

If order changes are necessary to satisfy the transmission performance for a Special Access Service ordered by a customer, these changes will be made without order change charges being incurred by the customer.

(A) Service Date Change: The customer may request a change of service date on a pending Access Order prior to the service date. A change of service date is a change of the scheduled service date by the customer to either an earlier date or a later date, which does not exceed 30 calendar days from the original service date.

If the Company determines that the customer's request can be accommodated without delaying the service dates for orders of other customers, the service date will be changed and the Service Date Change Charge, as set forth in the various Rate Sections (as defined in Section 2.6), will be applied to the order. (C) (C)

If the service date is changed to an earlier date, and the Company determines additional labor or extraordinary costs are necessary to meet the earlier service date requested by the customer, the customer will be notified by the Company that Expedited Order Charges as set forth in the various Rate Sections (as defined in Section 2.6), will apply. Such charges will apply in addition to the Service Date Change Charge. If the requested service date exceeds 30 calendar days following the original service date, and the Company determines that the customer's request can be accommodated, the (C)

RECEIVED
FEB 21 2007
STATE OF ALASKA
REGULATORY COMMISSION OF ALASKA

GCI COMMUNICATION CORP.

ACCESS SERVICES

5. Ordering Options for Switched and Special Access Service (Cont'd)
   5.8 Charges Associated with Access Ordering (Cont'd)
      5.8.3 Access Order Change Charges (Cont'd)
         (A) Service Date Change (Cont'd)

Company will cancel the original order and apply the Cancellation Charges as set forth in the various Rate Sections (as defined in Section 2.6). A new Access Order with a new service date will be issued. The Service Date Change Charge will not apply, however, the Access Order Charge will apply to the new order. (C)

If the service date is changed due to a design change as set forth in (B) following, the Service Date Change Charge will apply.

(B) Design Change: The customer may request a design change to the service ordered prior to the requested service date. A design change is any change to an Access Order which requires engineering review. An engineering review is a review by Company personnel, of the service ordered and the requested changes to determine what changes in the design, if any, are necessary to meet the changes requested by the customer. Design changes include such things as the addition or deletion of optional features or functions or a change in the type of Transport Termination (Switched Access only), type of channel interface, type of Interface Group or technical specification package. Design changes do not include a change of customer-designated premises, first point of switching, Feature Group type or Special Access Service channel type. Changes of this nature require the issuance of a new order and the cancellation of the original order with appropriate cancellation charges applied.

(L)

(L)

(L) Matter relocated to Original Sheet No. 65.1.

Pursuant to:
U-06-136(3)

Effective: February 16, 2007

Issued by: GCI Communication Corp.

By: Jennifer K.G. Robertson

Title: Tariffs & Licenses Manager

RCA No. 489 Original Sheet No. 65.1

Canceling

Sheet No.

RECEIVED
FEB 21 2007
STATE OF ALASKA
REGULATORY COMMISSION OF ALASKA

GCI COMMUNICATION CORP.

ACCESS SERVICES

5. Ordering Options for Switched and Special Access Service (Cont'd)
   5.8 Charges Associated with Access Ordering (Cont'd)
      5.8.3 Access Order Change Charges (Cont'd)
         (B) Design Change: (Cont'd)

The Company will review the requested change; notify the customer whether the change is a design change, if the change can be accommodated and if a new service date is required. If the customer authorizes the Company to proceed with the design change, a Design Change Charge will apply, in addition to the charge for Additional Engineering, as set forth in the various Rate Sections (as defined in Section 2.6). If a change of service date is required, the Service Date Change Charge as set forth in the various Rate Sections (as defined in Section 2.6) will also apply. The Access Order Charge as specified in the various Rate Sections (as defined in Section 2.6) does not apply. (L) (L) (C) (L) (C) (C)

(L) Matter relocated from 1st Revised Sheet No. 65.

Pursuant to:
U-06-136(3)

Effective: February 16, 2007

Issued by: GCI Communication Corp.

By: Jennifer K.G. Robertson

Title: Tariffs & Licenses Manager

RECEIVED
FEB 21 2007
STATE OF ALASKA
REGULATORY COMMISSION OF ALASKA

ACCESS SERVICES

5. Ordering Options for Switched and Special Access Service (Cont'd)

5.9 Minimum Periods and Cancellation

5.9.1 Minimum Periods

The minimum period for part-time Video and Program Audio Special Access Services is one day even though the service will be provided only for the duration of the event specified on the order (e.g., one-half hour, two hours, five hours, etc.).

Switched Access Service has no minimum period. The minimum period for which all other Access Service is provided and for which charges are applicable is one month.

5.9.2 Development of Minimum Period Charges

When Access Service is disconnected after commencement of service but prior to the expiration of the minimum period, charges are applicable for the balance of the minimum period. A discount constitutes facilities being returned to available inventory.

The Minimum Period Charge for monthly billed services will be determined as follows:

(A) For Switched Access Service, the charge for a month or fraction thereof is equal to the applicable recurring charges plus any nonrecurring and/or special construction charge(s) that may be due.

(B) For Special Access Service, the charge for a month or fraction thereof is the applicable monthly rates for the appropriate channel type plus any optional features, nonrecurring and/or special construction charge(s) that may apply.

The Minimum Period Charge for part-time Video and Program Audio Services is the applicable daily rate for the appropriate channel type as set forth in the various Rate Sections (as defined in Section 2.6). (C) (C)

RECEIVED
MAR - 3 1997
ALASKA PUBLIC
UTILITIES COMM.

GCI COMMUNICATION CORP.

ACCESS SERVICES

5. Ordering Options for Switched and Special Access Service (Cont'd)
5.9 Minimum Periods and Cancellation (Cont'd)

5.9.3 Cancellation of an Access Order

(A) A customer may cancel an access Order for the installation of service on any date prior to the service date. The cancellation date is the date the Company receives written or verbal notice from the customer that the order is to be cancelled. The verbal notice must be followed by written confirmation within 10 days. If a customer or a customer's end user is unable to accept Access Service within 30 calendar days after the original service date, the customer has the choice of the following options:

- The Access Order shall be cancelled and charges set forth in (B) following will apply or,
- Billing for the service will commence.

In such instances, the cancellation date or the billing date, depending on which option is selected by the customer, shall be the 31st day beyond the original service date of the Access Order.

(B) When a customer cancels an Access Order for the installation of service, a Cancellation Charge will apply as follows:

(1) Installation of Switched or Special Access Service facilities is considered to have started when the Company incurs any cost in connection therewith or in preparation thereof which would not other have been incurred.

(2) Where the customer cancels an Access order prior to the start of installation of access facilities, no charges shall apply.

RECEIVED
FEB 21 2007
STATE OF ALASKA
REGULATORY COMMISSION OF ALASKA

GCI COMMUNICATION CORP.

ACCESS SERVICES

5. Ordering Options for Switched and Special Access Service (Cont'd)
   5.9 Minimum Periods and Cancellation (Cont'd)
      5.9.3 Cancellation of an Access Order (Cont'd)
         (B) (Cont'd)

(3) Where installation of access facilities has been started prior to the cancellation, the charges specified in (a) or (b) following, whichever is lower, shall apply.

(a) A charge equal to the costs incurred in such installation, less estimated net salvage. Such costs include the nonrecoverable cost of equipment and material ordered, provided or used, plus the nonrecoverable cost of installation and removal including the costs of engineering, labor, supervision, transportation, rights-of-way and other associated costs;

(b) The charge for the minimum period of Switched or Special Access Service ordered by the customer.

(C) When a customer cancels an order for the discontinuance of service; no charges apply for the cancellation.

(D) If the Company misses a service date by more than 30 days and such delay is not requested or caused by the customer (excluding those circumstances where the data is missed due to acts of God, governmental requirements, work stoppages and civil commotions), the customer may cancel the Access Order without incurring cancellation charges.

5.9.4 Partial Cancellation Charge

Any decrease in the number of ordered Special Access Service channels or Switched Access Service lines, trunks or busy hour minutes of capacity will be treated as a partial cancellation and charges will be determined as set forth in the various Rate Sections (as defined in Section 2.6) (C) (C)

Pursuant to:
U-06-136(3)

Effective: February 16, 2007

Issued by: GCI Communication Corp.

By: Jennifer K.G. Robertson Title: Tariffs & Licenses Manager

INFORMATIONAL FILING ONLY

RECEIVED 06/24/21

ACCESS SERVICES

6. Switched Access Service

6.1 General

Switched Access Service, which is available to customers for their use in furnishing their services to end users, provides a communication path between a customer's premises and an end user's premises. It provides for the use of common terminating, switching and trunking facilities, and both common subscriber plant and unshared subscriber plant (i.e., WATS access lines) of the Company. Switched Access Service provides for the ability to originate calls from an end user's premises to a customer's premises, and to terminate calls from a customer's premises to an end user's premises. Specific reference to material describing the elements of Switched Access Service are provided in 6.2.

Rates and charges for Switched Access Service depend generally on its use by the customer, i.e., for MTS for WATS services. Rates and charges for Switched Access Service are in the Rate Sections (as defined in Section 2.6, Rate Sections) following. The application of rates for Switched Access Service is described in 6.8 following.

6.2 Rate Categories

The rate categories which apply to Switched Access Service are:

- Carrier Common Line
- Local Switching
- Information Surcharge
- Common Transport
- Dedicated Transport
- Toll Free Database Query Charge(s) (T)
- Equal Access Recovery Charge

The Feature Group(s) offered by the Company is described in 6.3. Rates apply for switched access service depending on a customer's usage. Access minutes are determined as described in 6.8.4. Rate classifications are described in 6.8.1. The following diagrams depict generic views of the components of Switched Access Service and the manner in which the components are combined to provide a complete Access Service.

INFORMATIONAL FILING ONLY

RECEIVED 06/24/21

GCI COMMUNICATION CORP.

ACCESS SERVICES

6. Switched Access Service (Cont'd)
   6.2 Rate Categories (Cont'd)

Diagram 1

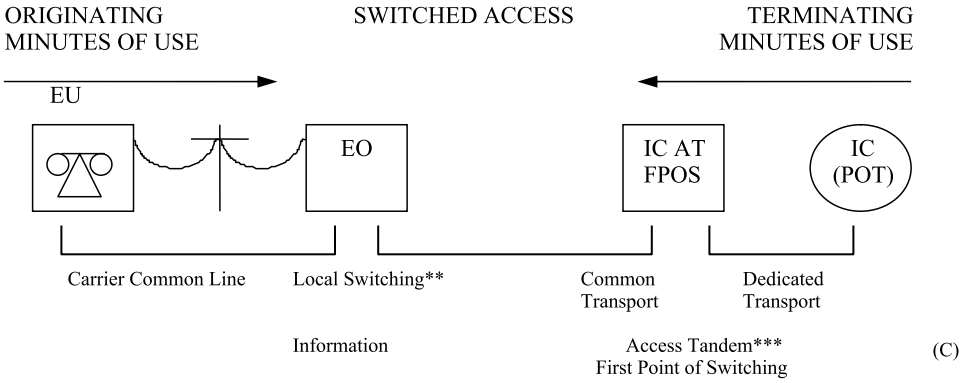

(C)

CL - Common Line
LS - Local Switching
IS - Information Surcharge
CT - Common Transport
DT - Dedicated Transport
EU - End User

** An Equal Access Recovery Charge also applies at locations where equal access is available.
***As of July 1, 2021, for originating toll free minutes only, end office rate elements (i.e.Local Switching and Information Surcharge) are listed in Rate Sections, following, and the Joint Tandem Switched Transport rate element in Rate Sections, following, is applied per tandem as set forth in Section 6.2.1 following, in lieu of the Tandem Switched Facility, Tandem Switched Termination and Tandem Switching rate elements. (N) (N)

RECEIVED
JUN 17 2011
STATE OF ALASKA
REGULATORY COMMISSION OF ALASKA

GCI COMMUNICATION CORP.

ACCESS SERVICES

6. Switched Access Service (Cont'd)
   6.2 Rate Categories (Cont'd)

Diagram 2

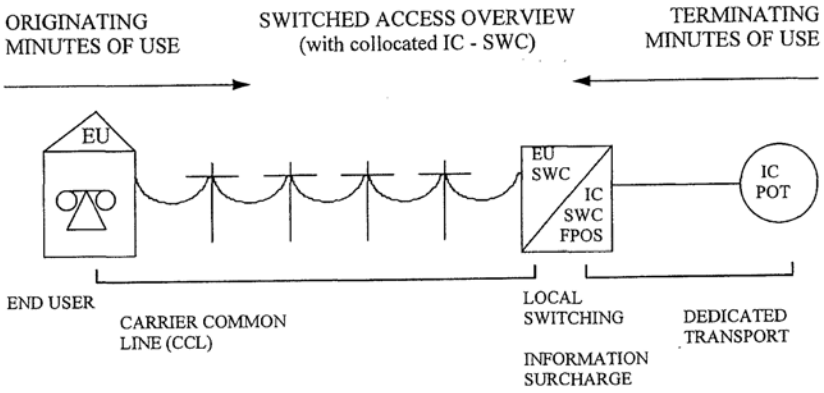

KEY:
IC POT - Interexchange Carrier Point of Termination
IC SWC - Interexchange Carrier (Customer) Serving Wire Center
IC FPOS - Interexchange Carrier First Point of Switching
EU SWC - End User Serving Wire Center
CL - Common Line (C)

CHARGES:

(C)

LS - Local Switching
IS - Information Surcharge
DT - Dedicated Transport

(D)

Tariff Advice No. 553-489, Pursuant to R-08-003(9) Effective: August 1, 2011

Issued by: GCI Communication Corp.
By: Cynthia L. Lynch Title: Tariffs & Licenses Manager

RECEIVED
MAR - 3 1997
ALASKA PUBLIC UTILITIES COMM.

ACCESS SERVICES

6. Switched Access Service (Cont'd)
   6.2 Rate Categories (Cont'd)

Diagram 3

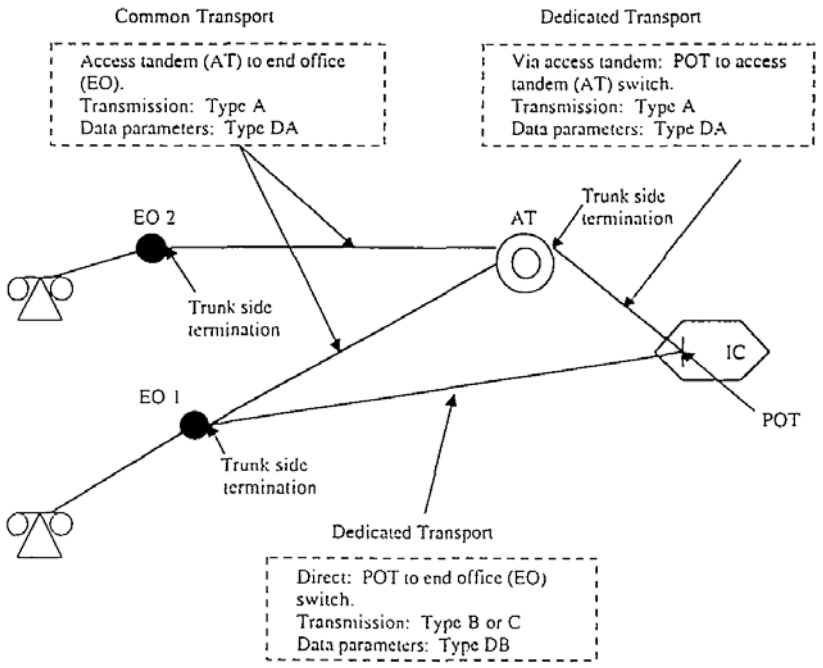

RECEIVED
AUG 2 6 2009
STATE OF ALASKA
REGULATORY COMMISSION OF ALASKA

GCI COMMUNICATION CORP.

ACCESS SERVICES

6. Switched Access Service (Cont'd)
   6.2 Rate Categories (Cont'd)

   6.2.1 Transport Categories

The Transport elements provide the transmission facilities between the interconnection point and each end office switch of the Company where the customer's traffic is switched when originating and terminating the customer's traffic.

Dedicated Transport provides that portion of the Company frequency transmission path which extends from the interconnection point to the IC's first point of switching and includes both the physical outside plant facilities and necessary transmission equipment inside and outside of the central office (voice grade transmission facilities/interface and conditioning arrangements). The Dedicated Transport rate will apply to each switched access service at the interexchange carriers serving wire center and will also apply if the IC serving wire center and the end user wire center are collocated, unless otherwise noted. The Dedicated Transport rate is applied on a per trunk or circuit path for all switched access feature groups. (N)

Common Transport provides for the frequency transmission path(s) from the IC's first point of switching to the Company end office(s) and includes the access tandem switch, the physical outside plant facilities and necessary transmission equipment including those found in intermediate offices. The Common Transport rate will not apply if the IC's first point of switching and the end user serving wire center are collocated. Common Transport is assessed on a per access minute basis for all switched access feature groups.

Common or Dedicated Transport is a two-way voice frequency transmission path composed of facilities determined by the Company. The two-way voice frequency transmission path permits the transport of calls in the originating direction (from the end user end office switch to the customer's designated premises) and in the terminating direction (from the customer's designated premises to the end office switch), but not simultaneously. The voice frequency transmission path may be comprised of any type of plant capable of the transmission of voice and associated telephone signals within the frequency bandwidth of approximately 300 to 3000 Hz.

INFORMATIONAL FILING ONLY

RECEIVED 06/24/21

GCI COMMUNICATION CORP.

ACCESS SERVICES

6. Switched Access Service (Cont'd)

6.2 Rate Categories (Cont'd)

6.2.1 Transport Categories (cont'd)

The Tandem Switched Transport rate elements recover a portion of the costs associated with a communications path between a serving Wire center and an end office or between a tandem and an end office on circuits that are switched at a tandem switch.

Tandem Switched Transport rates consist of a Tandem Switching rate, a Tandem Switched Facility rate, and a Tandem Switched Termination rate. For originating toll free minutes only, a Joint Tandem Switched Transport rate applies in lieu of the Tandem Switching, Tandem Switched Facility and Tandem Switched Termination rates and is only billed by the tandem company that performs the tandem switching function. (C) (C)

The Tandem Switching rate recovers a portion of the costs of switching traffic through an access tandem. The Tandem Switching rate specified in the rate sections following is applied on a per access minute per tandem basis for all originating (excluding Toll Free) and all terminating minutes of use switched at the tandem. (C)

The Tandem Switched Facility rate recovers a portion of the costs of transmission facilities, including intermediate transmission circuit equipment, between the end points of interoffice circuits. The Tandem Switched Facility rate, specified in the rate sections following is applied on a per access minute per mile basis for all originating (excluding Toll Free) and all terminating minutes of use routed over the facility. (C)

The Tandem Switched Termination rate recovers a portion of the costs of circuit equipment necessary for the termination of each end of the Tandem Switched Facility. The Tandem Switched Termination rate specified In 1 the rate sections following is applied on a per access minute basis (for all originating (excluding Toll Free) and terminating minutes of use routed over the facility) at each end of Tandem Switched Facility (e.g., at the end office, host office, remote, tandem, and serving wire center). When the Tandem Switched Facility mileage is zero, neither the Tandem Switched Facility rate nor the Tandem Switched Termination rate will apply. (C)

Terminating to Tandem 3rd Party rates are applicable when Terminating Tandem Switched Transport is provided through a Company Access Tandem and the Terminating End Office is not Company owned. Terminating Tandem 3rd Party rates are also applicable when Terminating Tandem Switched Transport Is provided through an Access Tandem which is not Company owned and the Terminating End Office is' company owned, including Direct-Trunked Transport arrangements, otherwise, Terminating to Tandem End Office rates apply.

INFORMATIONAL FILING ONLY

RECEIVED 06/24/21

ACCESS SERVICES

6. Switched Access Service (Cont'd)
   6.2 Rate Categories (Cont'd)
      6.2.1 Transport Categories (Cont'd)

The Joint Tandem Switched Transport rate specified in Rate Sections, following, is applied on a per originating toll free access minute per tandem basis in lieu of the Tandem Switching, Tandem Switched Facility, and Tandem Switched Termination rates and is only billed by the tandem company that performs the tandem switching function. (N) | (N)

When a WATS Access Line is provided to an end user served by an end office that does not perform WATS/800 switching functions, Special Access rates and surcharges as set forth in Section 7, will apply for the facilities necessary to extend the WATS Access Line to the interconnection point with the WATS Serving Office of interexchange carrier.

The Company will work cooperatively with the customer to develop routing and other transport arrangements.

(A) Interface Groups: Ten Interface Groups are provided for terminating Common or Dedicated Transport at the customer's designated premises. Each Interface Group provides a specified premises interface (e.g., two-wire, four-wire, DS1, etc.). Where transmission facilities permit, the individual transmission path between the customer's designated premises and the first point of switching may at the option of the customer be provided with optional features as set forth in (B) following. Interface groups 1 and 2 described in 11.1 and the optional features described in (B) following are nonchargeable features. No additional charges other than the rates for Transport in the Rate Sections (as defined in Section 2.6, Rate Sections) apply. Additional charges may apply for Interface Groups 3 through 10.

As a result of the customer's access order and the type of Company transport facilities serving the customer's premises, the need for signaling conversions or two-wire to four-wire conversions, or the need to terminate digital or high frequency facilities in channel bank equipment may require that Company equipment be placed at the customer's designated premises. For example, if a voice frequency interface is ordered by the customer and the Company facilities serving the customer's designated premises are digital, then Company channel bank equipment must be placed at the customer's designated premises in order to provide the voice frequency interface ordered by the customer. Technical specifications concerning the available interface groups are set forth in 11.1 following.

INFORMATIONAL FILING ONLY

RECEIVED 06/24/21

ACCESS SERVICES

6. Switched Access Service (Cont'd)
   6.2 Rate Categories (Cont'd)
      6.2.1 Transport Categories (Cont'd)

(B) Chargeable Optional Features: Toll Free Database Access Service is provided to all customers in conjunction with FGD switched access service. A Basic or Vertical Feature Query charge, in the Rate Sections (as defined in Section 2.6, Rate Sections) following, is assessed for each query launched to the Toll Free database. The Basic Query provides the identification of the customer to whom the call will be delivered. The Vertical Feature Query provides this same customer identification function in addition to vertical features which may include: (1) call validation (ensuring that calls originate from subscribed service areas); (2) POTS translation of 800 series numbers (which is generally necessary for the routing of Toll Free calls); (3) alternate POTS translation (which allows subscribers to vary the routing of Toll Free calls based on factors such as time of day, place of origination of the call, etc.); and (4) multiple carrier routing (which allows subscribers to route to different carriers based on factors similar to those in (3)). (T) (T) (T) (T) (T)

6.2.2 End Office Categories

The End Office rate category establishes the charges related to the local end office switching and end user termination functions necessary to complete the transmission of Switched Access communications to and from the end users served by the local end office. The End Office rate category includes the Local Switching and Information Surcharge rate elements.

(A) Local Switching: The Local Switching rate element establishes the charges related to the use of end office switching equipment, the terminations in the end office of end user lines, and the terminations of calls at Company Intercept Operators or recordings.

Local Switching rates are assessed to a customer on the total number of access minutes. Rates for Local Switching are set forth in the Rate Sections (as defined in Section 2.6, Rate Sections) following.

RECEIVED
MAR 0 8 2007
STATE OF ALASKA
REGULATORY COMMISSION OF ALASKA

GCI COMMUNICATION CORP.

ACCESS SERVICES

6. Switched Access Service (Cont'd)
   6.2 Rate Categories (Cont'd)
      6.2.2 End Office Categories (Cont'd)
         (A) Local Switching (Cont'd)

There are three types of functions included in the local Switching rate element: Common Switching, Line Termination, and Intercept. These are described in (1) through (3) following:

(1) Common Switching: Common Switching provides the local end office switching functions associated with access. The Common Switching arrangements provided for the various Feature Group arrangements are described in 6.3 following.

(2) Line Termination: Line termination provides for the termination of end user lines in the local end office. There are two types of Line Terminations, i.e., Common Line Terminations and Special Access Service Terminations utilized in the provision of WATS or WATS-type service.

(3) Intercept: The Intercept function provides for the termination of a call at a Company Intercept operator or recording. The operator or recording tells a caller why a call, as dialed, could not be completed, and if possible, provides the correct number.

(B) Information Surcharge: Information Surcharge rates are assessed to a customer based on the total number of access minutes. Information Surcharge rates are as set forth in the Rate Sections (as defined in Section 2.6, Rate Sections) following. (N)

The number of end office switching transmission paths will be determined as set forth in 6.6.5 following.

6.2.3 Equal Access Recovery Charge

An Equal Access Recovery Charge (EARC) is assessed for the provision of Feature Group D switched access services at locations where equal access is available. The EARC is further described in Section 6.8.1(C)(2).

INFORMATIONAL FILING ONLY

RECEIVED 06/24/21

ACCESS SERVICES

6. Switched Access Service (Cont'd)
   6.2 Rate Categories (Cont'd)

6.2.4 Toll Free Database Access Service (T)

Toll Free Database Access Service is provided to all customers in conjunction with (T)
and FGD switched access service. When a 1+800+NXX-XXXX call is originated by
an end user, the Company will utilize the Signaling System 7 (SS7) network to query
an Toll Free database to identify the customer to whom the call will be delivered and (T)
provide vertical features based on the dialed ten digits. The call will then be routed
to the identified customer over FGD switched access.

A Basic or Vertical Feature Query charge, as set forth in the Rate Sections (as
defined in Section 2.6, Rate Sections) following, is assessed for each query launched
to the database which identifies the customer to whom the call will be delivered. (T)
The Basic Query provides the identification of the customer to whom the call will be
delivered. The Vertical Feature Query provides this same customer identification
function in addition to vertical features which may include: (1) call validation
(ensuring that calls originate from subscribed service areas); (2) POTS translation of
800 series numbers; (3) alternate POTS translation (which allows subscribers to vary (T)
the routing of Toll Free calls based on factors such as time of day, place or (T)
origination of the call, etc.); and (4) multiple carrier routing (which allows
subscribers to route to different carriers based on factors similar to those in (3)).
If the originating company transmits the results of the query, it will assess the query (C)
charge per call. However, when the originating company is unable to do so, the next
company in the call path that is able to launch and transmit the results of the query
will assess the query charge. Only one query charge per call may be assessed. (C)

The description and application of this charge with respect to Feature Group D is as
set forth in 6.3.3(C) and 6.3.5(C) following.

6.3 Provision and Description of Switched Access

Switched Access Service is provided in four Feature Group arrangements. The Transport
and End Office rate categories described in 6.2 preceding apply to all Switched Access
Service.

RECEIVED
MAR - 3 1997
ALASKA PUBLIC UTILITIES COMM.

ACCESS SERVICES

6. Switched Access Service (Cont'd)
   6.3 Provision and Description of Switched Access (Cont'd)

   6.3.1 Feature Group A (FGA)

   (A) Description

   (1) FGA Switching is provided at all end office switches. At the option of the customer, FGA is provided on a single or multiple line group basis and is arranged for originating calling only, terminating calling only, or two-way calling which are specified by the customer's order for service.

   (2) FGA provides a line side termination at the first point of switching (dial tone office). The line side termination will be provided with either ground start supervisory signaling or loop start supervisory signaling. The type of signaling is at the option of the customer.

   (3) The Company and customer shall mutually select first point of switching at which the line side termination is to be provided.

   (4) A seven digit telephone number assigned by the Company is provided for access to FGA switching in the originating direction. The seven digit local telephone number will be associated with the selected end office switch and is of the form NXX-XXXX. If the customer requests a specific seven digit telephone number that is not currently assigned, and the Company can, with reasonable effort, comply with the request, the requested number will be assigned to the customer.

   (5) FGA switching, when used in the terminating direction, is arranged with dial tone start-dial signaling. When used in the terminating direction, FGA switching may, at the option of the customer, be arranged for dial pulse or dual tone multifrequency address signaling, subject to availability of equipment at the first point of switching. When FGA switching is provided in a hunt group or uniform call distribution arrangement, all FGA switching will be arranged for the same type of address signaling.

RECEIVED
MAR - 3 1997
ALASKA PUBLIC UTILITIES COMM.

GCI COMMUNICATION CORP.

ACCESS SERVICES

6. Switched Access Service (Cont'd)
   6.3 Provision and Description of Switched Access (Cont'd)
      6.3.1 Feature Group A (FGA) (Cont'd)
         (A) Description (Cont'd)

(6) No address signaling is provided by the Company when FGA switching is used in the originating direction. Address signaling in such cases, if required by the customer, must be provided by the customer's end user using in-band tone address signaling techniques. Such in-band tone address signals will not be regenerated by the Company and will be subject to the ordinary transmission capabilities of the Transport provided.

(7) FGA, when being used in the terminating direction, may be used to access valid NXX's in the local exchange area. For FGA the local exchange area is defined as the local calling area of the end office switch from which the FGA is provided. The description of any specific FGA is provided. The description of any specific FGA Area will be provided to the customer upon request.

Access is also provided to local operator service (0- and 0+), directory assistance (411 and 555-1212), emergency reporting service (911), information services (e.g., time and temperature), and IC services (by dialing the appropriate digits). The customer will be billed for an operator surcharge as set forth in local or other tariffs, for local operator assistance (0-) calls; directory assistance (411 and 555-1212) calls; and customer call charges in accordance with other IC tariffs in force when the Company performs the billing for such customer calls. FGA used for calls outside the FGA Access Area, will be charged under applicable local and toll tariffs.

(8) When a FGA switching arrangement for an individual customer (a single line or entire hunt group) is discontinued at an end office, an intercept announcement is provided.

RECEIVED
MAR - 3 1997
ALASKA PUBLIC UTILITIES COMM.

ACCESS SERVICES

6. Switched Access Service (Cont'd)
   6.3 Provision and Description of Switched Access (Cont'd)
      6.3.1 Feature Group A (FGA) (Cont'd)
         (A) Description (Cont'd)

(9) Testing Capabilities: FGA is provided, in the terminating direction where equipment is available, with seven digit access to balance (100 type) test line and milliwatt (102 type) test line. In addition to the tests which are included with the installation of service (Acceptance Testing) and as ongoing routine testing, Additional Cooperative Acceptance Testing and Additional Manual Testing are available as set forth in 9.3.1 following.

(B) Optional Features: The following features are available in lieu of, or in addition to, the standard features provided with Feature Group A:

(1) Common Switching Nonchargeable Optional Features

(a) Call Denial on Line or Hunt Group
(b) Service Code Denial on Line or Hunt Group
(c) Hunt Group Arrangement
(d) Uniform Call Distribution Arrangement
(e) Nonhunting Number for Use with Hunt Group or Uniform Call Distribution Arrangement
(f) Band Advance Arrangement for Use with Special Access Service Utilized in the Provision of WATS-Type Services
(g) Hunt Group Arrangement for Use with Special Access Service Utilized in the Provision of WATS-Type Services
(h) Uniform Call Distribution Arrangement for Use with Special Access Service Utilized in the Provision of WATS-Type Services
(i) Nonhunting Number Associated with a Hunt Group Arrangement or Uniform Call Distribution Arrangement for Use with Special Access Service Utilized in the Provision of WATS-Type Services

RECEIVED
MAR -3 1997
ALASKA PUBLIC UTILITIES COMM.

GCI COMMUNICATION CORP.

ACCESS SERVICES

6. Switched Access Service (Cont'd)
   6.3 Provision and Description of Switched Access (Cont'd)
      6.3.1 Feature Group A (FGA) (Cont'd)
         (B) Optional Feature (Cont'd)

            (2) Transport Nonchargeable Optional Features

               (a) Customer Specification of Local Transport Termination

1. Two-way operation with dial pulse address signaling and loop start supervisory signaling.

2. Two-way operation with dial pulse address signaling and ground start supervisory signaling

3. Two-way operation with dial tone multi-frequency address signaling and loop start supervisory signaling

4. Two-way operation with dial tone multi-frequency address signaling and ground start supervisory signaling

5. Terminating operation with dial pulse address signaling and loop start supervisory signaling

6. Terminating operation with dial pulse address signaling and ground start supervisory signaling

7. Terminating operation with dual tone multifrequency address signaling and loop start supervisory signaling

8. Terminating operation with dual tone multifrequency address signaling and ground start supervisory signaling

9. Originating operation with loop start supervisory signaling

10. Originating operation with ground start supervisory signaling

RECEIVED
MAR - 3 1997
ALASKA PUBLIC UTILITIES COMM.

GCI COMMUNICATION CORP.

ACCESS SERVICES

6. Switched Access Service (Cont'd)
   6.3 Provision and Description of Switched Access (Cont'd)
      6.3.1 Feature Group A (FGA) (Cont'd)
         (B) Optional Feature (Cont'd)
            (2) Transport Nonchargeable Optional Features (Cont'd)

               (b) Supervisory Signaling

               (c) Customer Specified Entry Switch Receive Level, if such levels do not interfere with the Company network performance

            (3) Feature Availability is Based on Current Technology

            (4) Optional Features Provided in Local Tariffs: Certain other features which may be available in connection with Feature Group A (e.g., custom calling features) are provided under the Company's local and/or general exchange service tariffs.

      6.3.2 Feature Group B (FGB)

         (A) Description

            (1) FGB, when directly routed to an end office (i.e., provided without the use of an access tandem switch), is provided at appropriately equipped Company electronic end office switches. When provided via Company designated electronic access tandem switches, FGB switching is provided at Company electronic and electromechanical end office switches.

            (2) FGB is provided as trunk side switching through the use of end office or access tandem switch trunk equipment. The switch trunk equipment is provided with wink start start-pulsing signals and answer and disconnect supervisory signaling.

RECEIVED
MAR - 3 1997
ALASKA PUBLIC UTILITIES COMM.

ACCESS SERVICES

6. Switched Access Service (Cont'd)
   6.3 Provision and Description of Switched Access (Cont'd)
      6.3.2 Feature Group B (FGB) (Cont'd)
         (A) Description (Cont'd)

(3) FGB switching is provided with multifrequency address signaling in both the originating and terminating directions, when available. Except for FGB switching provided with automatic number identification (ANI) or rotary dial station signaling arrangements as set forth in 6.3.2(B) following, any other address signaling in the originating direction, if required by the customer, must be provided by the customer's end user using in-band tone address signaling techniques. Such in-band tone address signals will not be regenerated by the Company and will be subject to the ordinary transmission capabilities of the Transport provided.

(4) The access code for FGB switching is a uniform access code. The form of the uniform access code is 950-1XXX or 950-0XXX for carriers. These uniform access codes will be the assigned access numbers of all FGB switched access service provided to the customer by the Company.

(5) FBG switching, when used in the terminating direction, may be used to access valid telephone numbers in the local exchange area of the terminating end office switch. The customer will also be billed additional non-access charges for calls to certain community information services for which rates are applicable when the Company performs billing for such services.

Additionally, non-access charges will also be billed for calls from a FGB trunk to another customer's service in accordance with that customer's applicable service rates when the Company performs the billing functions for that customer. Calls in the terminating direction will not be completed to 950-1XXX or 950-0XXX access codes, local operator assistance (0- and 0+), Directory Assistance (411 or 555-1212), service code 911 or other 950-1XXX or 950-0XXX access codes. Calls will not be completed to Directory Assistance (NPA-555-1212 or 555-1212). FGB may not be switched, in the terminating direction (i.e., from the access tandem to the end office), to FGA, B, or D Switched Access Service Feature Groups.

RECEIVED
MAR - 3 1997
ALASKA PUBLIC UTILITIES COMM.

ACCESS SERVICES

6. Switched Access Service (Cont'd)
   6.3 Provision and Description of Switched Access (Cont'd)
      6.3.2 Feature Group B (FGB) (Cont'd)
         (A) Description (Cont'd)

(6) The Company will establish a trunk group or groups for the customer at end office switches or access tandem switches where FGB switching is provided. When required by technical limitations, a separate trunk group will be established for each type of FGB switching arrangement provided. Different types of FGB or other switching arrangements may be combined in a single trunk group at the option of the Company.

(B) Optional Features

(1) Common Switching Nonchargeable Optional Features

(a) Automatic Number Identification (ANI)
(b) Up to 7 Digit Outpulsing of Access Digits to Customer

(2) Transport Nonchargeable Optional Features

(a) Rotary Dial Station Signaling
(b) Customer Specification of Local Transport Termination
(c) Supervisory Signaling
(d) Customer Specified Entry Switch Receive Level, if such levels do not interfere with Company network performance.

(C) Transmission Specifications: FGB is provided with either Type B or Type C Transmission Specifications. The specifications for the associated parameters are guaranteed to the end office when routed directly or to the first point of switching when routed via an access tandem. Type C Transmission Specifications are provided with Interface Group 1 and Type B is provided with Interface Groups 2 through 10. Type DB Data Transmission Parameters are provided with FGB to the first point of switching.

RECEIVED
MAR - 3 1997
ALASKA PUBLIC UTILITIES COMM.

ACCESS SERVICES

6. Switched Access Service (Cont'd)
   6.3 Provision and Description of Switched Access (Cont'd)
      6.3.2 Feature Group B (FGB) (Cont'd)

(D) Testing Capabilities: FGB is provided, in the terminating direction where equipment is available, with seven digit access to balance (100 type) test line, milliwatt (102 type) test line, nonsynchronous or synchronous test line, automatic transmission measuring (105 type) test line, data transmission (107 type) test line, loop around test line, short circuit test line and open circuit test line. Additional Automatic Testing, and Additional Manual Testing are available as set forth in 9.3.1 following.

(E) Design and Traffic Routing: For Feature Group B, the trunk directionality and traffic routing of the Switched Access Service between the customer designated premises and the entry switch are determined by the customer's order for service; except that the determining of traffic routing through a centralized equal access arrangement can occur only by mutual agreement between the Company and the customer, subject to Commission approval. Those Company offices providing equal access through centralized arrangements are identified in NATIONAL EXCHANGE CARRIER ASSOCIATION, INC. TARIFF F.C.C. NO. 4. Additionally, the customer may order the optional feature Customer Specification of Transport Termination as set forth in Section 11 following.

6.3.3 Reserved for Future Use

6.3.4 Reserved for Future Use

6.3.5 Feature Group D (FGD)

(A) Description

(1) FGD is provided at Company designated end office switches whether routed directly or via Company designated electronic access tandem switches. Those Company offices providing equal access through centralized arrangements are identified in NATIONAL EXCHANGE CARRIER ASSOCIATION, INC. TARIFF F.C.C. NO. 4.

RECEIVED
MAR - 3 1997
ALASKA PUBLIC UTILITIES COMM.

ACCESS SERVICES

6. Switched Access Service (Cont'd)
   6.3 Provision and Description of Switched Access (Cont'd)
      6.3.5 Feature Group D (FGD) (Cont'd)
         (A) Description (Cont'd)

(2) FGD is provided as trunk side switching through the use of end office or access tandem switch trunk equipment. The switch trunk equipment is provided with wink start start-pulsing signals and answer and disconnect supervisory signaling.

(3) FGD switching is provided with multifrequency address signaling. Up to 12 digits of the called party number dialed by the customer's end user using dual tone multifrequency or dial pulse address signals will be provided by Company equipment to the customer's premises where the Switched Access Service terminates. Such address signals will be subject to the ordinary transmission capabilities of the Transport provided.

(4) FGD switching, when used in the terminating direction, may be used to access valid telephone numbers in the local exchange area of the terminating end office switch.

Additionally, non-access charges will also be billed for calls from FGD trunk to another customer's service in accordance with that customer's applicable service rates when the Company performs the billing function for that customer. Calls in the terminating direction will not be completed to 950-1XXX or 950-0XXX access codes, local operator assistance (0- and 0+), Directory Assistance (411 and 555-1212), service code 911 and 10XXX access codes. Calls will be completed to Directory Assistance (NPA-555-1212 or 555-1212) when FGD switching is combined with Directory Assistance switching.

(5) The Company will establish a trunk group or groups for the customer at end office switches or access tandem switches where FGD switching is provided. When required by technical limitations, a separate trunk group will be established for each type of FGD switching arrangement provided. Different types of FGD or other switching arrangements may be combined in a single trunk group at the option of the Company.

INFORMATIONAL FILING ONLY

RECEIVED 06/24/21

ACCESS SERVICES

6. Switched Access Service (Cont'd)
   6.3 Provision and Description of Switched Access (Cont'd)
      6.3.5 Feature Group D (FGD) (Cont'd)
         (A) Description (Cont'd)

(6) The access code for FGD switching is a uniform access code of the form 10XXX. A uniform access code will be the assigned number of all FGD access provided to the customer by the Company. No access code is required for calls to a customer over FGD switched Access Service if the end user's telephone exchange service is arranged for presubscription to that customer.

Where no access code is required, the number dialed by the customer's end user shall be a seven or ten digit number for calls in the North American Numbering Plan (NANP). For international calls outside the NANP, a seven to twelve digit number may be dialed. The form of the numbers dialed by the customer's end user is NXX-XXXX, 0 or 1 + NXX-XXXX, NPA + NXX-XXXX, 0 or 1 + NPA + NXX-XXXXX, and, when the end office is equipped for International Direct Distance Dialing (IDDD), 01 + CC + NN or 011 + CC + NN.

When the 10XXX access code is used, FGD switching also provides for dialing the digit 0 for access to the customer's operator, 911 for access to the Company's emergency reporting service, or the end-of-dialing digit (#) for cut-through access to the customer's premises.

(7) FGD switching will be arranged to accept calls from telephone exchange service locations without the need for dialing 10XXX uniform access code.

(8) Unless prohibited by technical limitations, the customer's Interim NXX and/or Toll Free Database traffic may, at the option of the customer, be (T)
combined in the same trunk group arrangement with the customer's non-Interim NXX and/or Toll Free Database traffic. When required by technical (T)
limitations, or at the request of the customer, a separate trunk group will be established for Interim NXX and/or Toll Free Database traffic. (T)

INFORMATIONAL FILING ONLY

RECEIVED 06/24/21

ACCESS SERVICES

6. Switched Access Service (Cont'd)
   6.3 Provision and Description of Switched Access (Cont'd)
      6.3.5 Feature Group D (FGD) (Cont'd)
         (A) Description (Cont'd)

(9) When a customer has had FGB access in an end office and subsequently replaces the FGB access with FGD access, at the mutual agreement of the customer and the Company, the Company will direct calls dialed by the customer's end users using the customer's previous FGB access code to the customer's FGD access service. The customer must be prepared to handle normally dialed FGD calls, as well as calls dialed with the FGB access code which requires the customer to receive additional address signaling from the end user. Such calls will be rated as FGD. The Company may, with 90 days' written notice to the customer, discontinue this arrangement.

(B) Nonchargeable Optional Features

(1) Common Switching Optional Features

(a) Automatic Number Identification (ANI)
(b) Service Class Routing
(c) Alternate Traffic Routing
(d) Call Gapping Arrangement
(d) Call Gapping Arrangement
(e) Trunk Access Limitation
(f) Digital Switched 56 Service

(2) Optional Nonchargeable Transport Features

(a) Operator Trunk, Full Feature Arrangement
(b) Supervisory Signaling

(C) Chargeable Optional Features

(1) Interim NXX Translation
(2) Toll Free Database Service

(T)

RECEIVED
MAR - 3 1997
ALASKA PUBLIC UTILITIES COMM.

ACCESS SERVICES

6. Switched Access Service (Cont'd)
   6.3 Provision and Description of Switched Access (Cont'd)
      6.3.5 Feature Group D (FGD) (Cont'd)

(D) Transmission Specifications

FGD is provided with either Type A, Type B, or Type C Transmission Specifications as follows:

- When routed directly to the end office, either Type B or C is provided.
- When routed to an access tandem, only Type A is provided.
- Type A is provided on the transmission path from the access tandem to the end office.

Type C Transmission Specifications are provided with Interface Group A. Type A and Type B Transmission Specifications are provided with Interface Groups 2 through 10.

Type DA Data Transmission Parameters are provided for the transmission path between the customer's premises and the access tandem and between the access tandem and the end office. Type DB Data Transmission Parameters are provided with FGD for the transmission path between the customer's premises and the end office when directly routed to the end office.

(E) Testing Capabilities

FGD is provided in the terminating direction, where equipment is available, with seven digit access to balance (100 type) test line, milliwatt (102 type) test line, nonsynchronous or synchronous test line, automatic transmission measuring (105 type) test line, data transmission (107 type) test line, loop around test line, short circuit test line and open circuit test line. Additional Cooperative Acceptance Testing, Additional Automatic Testing and Additional Manual Testing are available as set forth in 9.3.1 following.

RECEIVED
MAR - 3 1997
ALASKA PUBLIC UTILITIES COMM.

ACCESS SERVICES

6. Switched Access Service (Cont'd)
   6.3 Provision and Description of Switched Access (Cont'd)
      6.3.5 Feature Group D (FGD) (Cont'd)

(F) Design and Traffic Routing

For Feature Group D, the Company shall design and propose the routing of Switched Access Service, including the selection of the first point of switching and the selection of facilities from the interface to any switching point and to the end offices where trunks are ordered. The Company shall decide if capacity is to be provided by originating only, terminating only, or two-way trunk groups. Finally, the Company will decide whether trunk side access will be provided through the use of two-wire or four-wire trunk terminating equipment.

The proposed selection of facilities and equipment and traffic routing of the service are based on standard engineering methods, available facilities and equipment, and the Company traffic routing plans. The Company will work cooperatively with the customer in determining the directionality of the service. The Company and the customer will mutually agree to the first point of switching (for example whether the service is to be routed directly to an end office or through an access tandem switch), except that the determination of the traffic routing through a centralized equal access arrangement can only occur subject to Commission approval. Those Company offices providing equal access through centralized arrangement are identified in NATIONAL EXCHANGE CARRIER ASSOCIATION, INC. TARIFF F.C.C. No. 4.

6.4 WATS Access Line

A WATS Access Line may, at the option of the customer, be provided for use with Switched Access Service. A WATS Access Line provides a connection between a customer's designated end user's premises and a Company end office switch capable of performing the necessary switching functions for 800 Service, WATS or similar services, and is provided only for use at the closed end of such service.

RECEIVED
MAR - 3 1997
ALASKA PUBLIC UTILITIES COMM.

ACCESS SERVICES

6. Switched Access Service (Cont'd)
6.4 WATS Access Line (Cont'd)

WATS Access Lines are provided as either an effective two-wire or effective four-wire transmission path. Each transmission path is provided with Standard Transmission Specifications and Data Transmission Parameters as set forth in 11.2.1 and 11.2.2 following. At the option of the customer, the WATS Access Line may be ordered with the Improved Two-Wire Voice Transmission Specifications (Guaranteed specifications are set forth in 11.2.3 following).

6.5 Transmission Specifications

Each Switched Access Service transmission path is provided with standard transmission Specifications. There are two different standard specifications (Types B and C). The standard for a particular transmission path is dependent on the Feature Group, the Interface Group and whether the service is directly routed or via an access tandem. In addition, the WATS Access Line is provided with standard transmission specifications for two-wire and four-wire. The available transmission specifications are set forth in 11.2.1 following. Data Transmission Parameters are also provided with each Switched Access Service transmission path and WATS Access Line. The Company will, upon notification by the customer that the data parameters set forth in 11.2.2 are not being met, conduct tests independently or in cooperation with the customer, and take any necessary action to insure that the data parameters are met.

In addition, the WATS Access Line may be optionally provided with Improved Two-Wire Voice Transmission Specifications as set forth in 11.2.3 following.

The Company will maintain existing transmission specifications on functioning service configurations installed prior to the effective date of this tariff except that service configurations having performance specifications exceeding the standards listed in this provision will be maintained at performance levels specified in this tariff.

The transmission specifications concerning Switched Access Service are immediate action limits and are set forth in 11.2 following. Acceptance limits are set forth in Technical Reference NPL 000334. This Technical Reference also provides the basis for determining Switched Access Service maintenance limits.

RECEIVED
MAR - 3 1997
ALASKA PUBLIC UTILITIES COMM.

GCI COMMUNICATION CORP.

ACCESS SERVICES

6. Switched Access Service (Cont'd)
6.5 Transmission Specifications (Cont'd)

Type C Transmission Specifications are provided with Interface Group 1 when routed directly to an end office. Type B is provided with Interface Groups 2 through 10, whether routed directly to an end office or to an access tandem.

6.6 Obligation of the Company

In addition to the obligations of the Company set forth in Section 2 preceding, the Company has certain other obligations pertaining only to the provision of Switched Access Service. These obligations pertaining only to the provision of Switched Access Service. These obligations are as follows:

6.6.1 Network Management

The Company will administer its network to insure the provision of acceptable service levels to all telecommunications users of the Company's network services. Generally, service levels are considered acceptable only when both end users and customers are able to establish connections with little or no delay encountered within the Company network. The Company maintains the right to apply protective controls, i.e., those actions, which selectively cancel the completion of traffic, over any traffic carried over its network, including that associated with a customer's Switched Access Service. Generally, such protective measures would only be taken as a result of occurrences such as failure or overload of Company or customer facilities, natural disasters, mass calling or national security demands.

RECEIVED
MAR - 3 1997
ALASKA PUBLIC UTILITIES COMM.

ACCESS SERVICES

6. Switched Access Service (Cont'd)
   6.6 Obligation of the Company (Cont'd)

   6.6.2 Reserved For Future Use

   6.6.3 Provision of Service Performance Data

   Subject to availability, end-to-end service performance data available to the Company through its own service evaluation routines, may be made available to the customer based on previously arranged intervals and format. These data provide information on overall end-to-end call completion and non-completion performance. These data do not include service performance data which are provided under other tariff sections, e.g., testing service results. The charges for provision of this data will be determined on an individual case basis.

   6.6.4 Trunk Group Measurement Reports

   Subject to availability, the Company will make available trunk group data in the form of usage in CCS, peg count and overflow, to the customer based on previously agreed to intervals.

   6.6.5 Determination of Number of Transmission Paths

   For Feature Groups A and B, which are ordered on a per line or per trunk basis respectively, and Feature Group D when ordered on a per trunk basis, the customer specifies the number of transmission paths in order for service or may order by BHMC. The Company and the IC will mutually agree on the number of trunks.

RECEIVED
MAR -3 1997
ALASKA PUBLIC UTILITIES COMM.

ACCESS SERVICES

6. Switched Access Service (Cont'd)
   6.6 Obligation of the Company (Cont'd)

   6.6.6 Design Blocking Measurement

   The Company will design the facilities used in the provision of Switched Access Service to meet the blocking probability criteria as set forth in (A) following and (B) following.

   (A) For Feature Groups B and D, the design blocking objective will be no greater than one percent (.01) between the point of termination at the customer's designated premises and the end office switch, whether the traffic is directly routed without an alternate route or routed via an access tandem. Standard traffic engineering methods as set forth in reference document Telecommunications Transmission Engineering - Volume 3 - Networks and Services (Chapters 6-7) will be used by the Company to determine the number of transmission paths required to achieve this level of blocking.

   (B) The Company will perform routine measurement functions to assure that an adequate number of transmission paths are in service. The Company will recommend that additional capacity (i.e., busy hour minutes of capacity) be ordered by the customer when additional paths are required to reduce the measured blocking to the designed blocking level. For the capacity ordered, the design blocking objective is assumed to have been met if the routine measurements show that the measured blocking does not exceed the threshold listed in the following tables.

RECEIVED
MAR - 3 1997
ALASKA PUBLIC UTILITIES COMM.

ACCESS SERVICES

6. Switched Access Service (Cont'd)
   6.6 Obligation of the Company (Cont'd)
      6.6.6 Design Blocking Measurement (Cont'd)
         (B) (Cont'd)

(1) For transmission paths carrying only first routed traffic direct between an end office and customer's designated premises without an alternate route, and for paths carrying only overflow traffic, the measured blocking thresholds are as follows:

Number of Transmission Paths Per Trunk Group	Measured Blocking Thresholds in the Time Consistent Busy Hour for the Number of Measurements Taken Between 8:00 a.m. and 11:00 p.m. Per Trunk Group			
	15-20 Measurements	11-14 Measurements	7-10 Measurements	3-6 Measurements
2	.070	.080	.090	.140
3	.050	.060	.070	.090
4	.050	.060	.070	.080
5-6	.040	.050	.060	.070
7 or more	.030	.035	.040	.060

(2) For transmission paths carrying first routed traffic between an end office and customer's premises via an access tandem, the measured blocking thresholds are as follows:

Number of Transmission Paths Per Trunk Group	Measured Blocking Thresholds in the Time Consistent Busy Hour for the Number of Measurements Taken Between 8:00 a.m. and 11:00 p.m. Per Trunk Group			
	15-20 Measurements	11-14 Measurements	7-10 Measurements	3-6 Measurements
2	.045	.055	.060	.095
3	.035	.040	.045	.060
4	.035	.040	.045	.055
5-6	.025	.035	.040	.045
7 or more	.020	.025	.030	.040

RECEIVED
FEB 21 2007
STATE OF ALASKA
REGULATORY COMMISSION OF ALASKA

GCI COMMUNICATION CORP.

ACCESS SERVICES

6. Switched Access Service (Cont'd)
   6.6 Obligation of the Company (Cont'd)

6.6.7 Design Layout Report

At the request of the customer, the Company will provide to the customer the makeup of the facilities and services provided from the customer's premises to the first point of switching. This information will be provided in the form of a Design Layout Report. Design Layout Reports will also be provided for WATS Access Lines when specifically requested by the customer. The Design Layout Report will be provided to the customer at no charge, and will be reissued or updated whenever these facilities are materially changed.

6.6.8 Testing

(A) Acceptance Testing: At no additional charge the Company will, at the customer's request, cooperatively test at the time of installation, the following parameters: loss, C-notched noise, C-message noise, 3-tone slope, d.c. continuity and operational signaling. When the Local Transport is provided with Interface Groups 2 through 10, and the Transport Termination is two-wire (i.e., there is a four-wire to two-wire conversion in Local Transport), balance parameters (equal level echo path loss) may also be tested.

(B) Routine Testing: At no additional charge, the Company will, at the customer's request, test after installation on an automatic or manual basis, 1004 Hz loss, C-message noise and Balance (Return loss). In the case of automatic testing, the customer shall provide remote office test lines and 105 test lines with associated responders or their functional equivalent.

The frequency of these tests will be that which is mutually agreed upon by the customer and the Company, but shall consist of not less than quarterly 1004 Hz Loss and C-message noise tests and an annual Balance test. Trunk test failures requiring customer participation for trouble resolution will be provided to the customer on an as-occurs basis.

Additional tests may be ordered as set forth in 9.3.1 following. Charges for these additional tests are set forth in the various Rate Sections (as defined in Section 2.6). (C)

RECEIVED
MAR - 3 1997
ALASKA PUBLIC UTILITIES COMM.

ACCESS SERVICES

6. Switched Access Service (Cont'd)

6.7 Obligations of the Customer

In addition to the obligations of the customer set forth in Section 2.3, the customer has certain specific obligations pertaining to the use of Switched Access Service. These obligations are as follows:

6.7.1 Supervisory Signaling

The customer's facilities shall provide the necessary on-hook, off-hook, answer and disconnect supervision.

6.7.2 Trunk Group Measurement Reports

With the agreement of the customer, trunk group data in the form of usage in CCS, peg count and overflow for its end of all access trunk groups, where technologically feasible, will be made available to the Company. These data will be used to monitor trunk group utilization and service performance and will be provided based on previously arranged intervals and format.

6.8 Rate Regulations

This section contains the specific regulations governing the rates and charges that apply for Switched Access Service.

6.8.1 Application of Rates and Charges

(A) Nonrecurring Charges: Nonrecurring charges are one-time charges that apply for a specific work activity (i.e., installation or change to an existing service). The types of nonrecurring charges that apply for Switched Access Service are: installation of service, Interim NXX Translation optional feature and service rearrangements. These charges, with the exception of the Interim NXX Translation optional feature, are in addition to the Access Order Charge.

RECEIVED
MAR - 3 1997
ALASKA PUBLIC UTILITIES COMM.

ACCESS SERVICES

6. Switched Access Service (Cont'd)
   6.8 Rate Regulations (Cont'd)
      6.8.1 Application of Rates and Charges (Cont'd)
         (A) Nonrecurring Charges (Cont'd)

(1) Installation of Service: Nonrecurring Charges apply to each Switched Access Service installed. For FGA, which is ordered on a per line basis, and for FGB and FGD, which is ordered on a per trunk basis, the charge is applied on a per line or trunk basis respectively. For FGD, which are ordered on a busy hour minutes of capacity basis, the charge is also applied on a per trunk basis but the charge applies only when the capacity ordered requires the installation or activation of an additional trunk which is uniquely identified for the sole use of the ordering customer.

(2) Interim NXX Translation Optional Feature: This nonrecurring charge applies to the initial order for the installation of the Interim NXX Translation optional feature with Feature Group D Switched Access Service and for each subsequent order received to add or change NXX translation codes. This charge applies whether this optional feature is installed coincident with or at any time subsequent to the installation of Switched Access Services.

(3) Service Rearrangements: All changes to existing services other than changes involving administrative activities and the off-hook supervisory signaling of FGA Access Services, will be treated as a discontinuance of the existing service and an installation of a new service. The nonrecurring charge described in (1) preceding will apply for this work activity. Moves that change the physical location of the point of termination are described and charged for as set forth in 6.8.1 following.

- If, due to technical limitations of the Company, a customer could not combine its Interim NXX traffic with its other trunk side Switched Access Service, no charge shall apply to combine these trunk groups when it becomes technically possible.

RECEIVED
MAR - 3 1997
ALASKA PUBLIC UTILITIES COMM.

ACCESS SERVICES

6. Switched Access Service (Cont'd)
   6.8 Rate Regulations (Cont'd)
      6.8.1 Application of Rates and Charges (Cont'd)
         (A) Nonrecurring Charges (Cont'd)

The following administrative changes will be made without charge:

- Change of customer name,
- Change of customer or customer's end user premises address when the change of address is not a result of physical relocation of equipment,
- Change in billing data (name, address, or contact name or telephone number),
- Change of agency authorization,
- Change of customer circuit identification,
- Change of billing account number,
- Change of customer test line number,
- Change of customer or customer's end user contact name or telephone number, and
- Change of jurisdiction.

Changes and additions to existing Switched Access Services which are necessary due to Company initiated network reconfigurations, and required to provide the same grade of service to the customer that existed prior to the reconfiguration, will be made without charge to the customer.

(B) Moves

A move involves a change in the physical location of one of the following:

- the point of termination at the customer's premises
- the customer's premises

The charges for the move are dependent on whether the move is to a new location within the same building or to a different building.

RECEIVED
MAR 0 8 2007
STATE OF ALASKA
REGULATORY COMMISSION OF ALASKA

GCI COMMUNICATION CORP.

ACCESS SERVICES

6. Switched Access Service (Cont'd)
   6.8 Rate Regulations (Cont'd)
      6.8.1 Application of Rates and Charges (Cont'd)
         (B) Moves (Cont'd)

(1) Moves Within the Same Building

When the move is to a new location within the same building, the charge for the move will be an amount equal to one half of the nonrecurring charge for the capacity affected. There will be no change in the minimum period requirements.

(2) Moves to a Different Building

Moves to a different building will be treated as a discontinuance and start of service and all associated nonrecurring charges will apply. New minimum period requirements will be established for the new service. The customer will also remain responsible for satisfying all outstanding minimum period charges for the discontinued service.

(C) Recurring Charges

(1) Access: With the exception of the Equal Access Recovery Charge, all recurring rates as set forth in the Rate Sections (as defined in Section 2.6, Rate Sections), apply to all Feature Groups A, B, and D Switched Access Services. Customer usage will be accumulated for billing on a monthly basis, or another period. The Company will notify the customer if billing is to occur on a basis other than monthly. (N)

(2) Equal Access Recovery Charge (EARC): The Equal Access Recovery Charge is a monthly charge assessed to customers who obtain FGD Switched Access Service. Application of this charge is as follows:

(a) The EARC is based upon intrastate Feature Group D Trunks or the total number of presubscribed equal access lines.

Pursuant to:
U07-052(1)

Effective: April 24, 2007

Issued by: GCI Communication Corp.

By: Jennifer K.G. Robertson

Title: Tariffs & Licenses Manager

RECEIVED

MAR 0 8 2007

STATE OF ALASKA
REGULATORY COMMISSION OF ALASKA

GCI COMMUNICATION CORP.

ACCESS SERVICES

6. Switched Access Service (Cont'd)
   6.8 Rate Regulations (Cont'd)
      6.8.1 Application of Rates and Charges (Cont'd)
         (C) Recurring Charges (Cont'd)
            (2) Equal Access Recovery Charge (EARC): (Cont'd) (N)

(b) EARC rates are local exchange carrier specific and are found in the various Rate Sections (as defined in Section 2.6).

(D) Notice of Equal Access Conversion

(1) The Company will provide written notification to all access customers of record within Alaska that an end office is scheduled to be converted to an equal access end office. This notification will be sent, via certified U.S. Mail, to each customer of record in Alaska where the conversion is scheduled to occur, at least six months in advance of the conversion date.

The customer will have the choice of converting all or part of the existing services to equal access (i.e., Feature Group D) or retaining the existing services. The conversion of existing services will be at no charge provided the order to convert such services to Feature Group D is received as set forth in 6.8.1(D)(2) following.

(2) Changes from one type of Feature Group to another will be treated as a discontinuance of one type of service and a start of another. Nonrecurring charges will apply, with one exception. When a customer upgrades a Feature Group A or B service to a Feature Group D service, the nonrecurring charges will not apply and minimum period obligations will not change, i.e., the time elapsed in the existing minimum period obligation will be credited to the minimum period obligations for FGD service, subject to the following limitations.

In order to avoid the imposition of nonrecurring charges a customer which is a participant in the intrastate presubscription allocation process (i.e., is on the presubscription ballot) must:

RECEIVED
MAR 0 8 2007
STATE OF ALASKA
REGULATORY COMMISSION OF ALASKA

GCI COMMUNICATION CORP.

ACCESS SERVICES

6. Switched Access Service (Cont'd)
   6.8 Rate Regulations (Cont'd)
      6.8.1 Application of Rates and Charges (Cont'd)
         (D) Notice of Equal Access Conversion (Cont'd)
            (2) (Cont'd)

- submit its order to disconnect Feature Group A and/or B within 30 days after the date the results of the final allocation of customers in an end office are actually received by the customer, and

- make the effective date for disconnection of the Feature Group A and/or B Access Services no later than 60 days after the final allocation results are received by the customer, and

- the end office scheduled to convert to intrastate equal access does not already provide interstate equal access.

A customer which is not a participant in the allocation process (i.e., is not on the presubscription ballot) is subject to the same rules preceding. The time frames for the non-participating customer(s) are the same as those which apply to the last customer to receive the results of the final allocation of customers in an end office who is a participant in the allocation process. For all other changes from one type of feature Group to another, new minimum period obligations will be established.

6.8.2 Reserved for Future Use
6.8.3 Reserved for Future Use

6.8.4 Measuring Access Minutes

Desired priority of the traffic sensitive minute volume source is as follows:
1. Measurement by the Company
2. Measurement by the Interexchange Carrier as reported to and acceptable to the Company
3. Assumed minutes, as listed in the Rate Sections (as defined in Section 2.6, Rate Sections), or an estimate by the Company based on previously known volumes (N) (N)

Pursuant to: U07-052(1) Effective: April 24, 2007

Issued by: GCI Communication Corp.

By: Jennifer K.G. Robertson Title: Tariffs & Licenses Manager

RECEIVED
MAR 0 8 2007
STATE OF ALASKA
REGULATORY COMMISSION OF ALASKA

GCI COMMUNICATION CORP.

ACCESS SERVICES

6. Switched Access Service (Cont'd)
   6.8 Rate Regulations (Cont'd)
      6.8.4 Measuring Access Minutes (Cont'd)

(A) Feature Group A

Customer Feature Group A traffic to end offices will be measured (i.e., recorded) or assumed by the Company at end office switches. Originating and terminating calls ;will be measured (i.e., recorded) or assumed by the Company to determine the basis for computing chargeable access minutes. In the event the Customer message detail is not available from the Company, the Company will obtain the volume of access minutes from the IC, use assumed minutes as listed in the Rate (N)
Sections (as defined in Section 2.6, Rate Sections), or use an estimate based on (N)
previously known volumes. The priority as set forth above will be used in selecting the method.

For terminating calls over FGA and for originating calls over FGA (when the off-hook supervisory signal is provided by the Customer's equipment before the called party answers), the measured minutes are the chargeable access minutes. For originating calls over FGA (when the off-hook supervisory signal is forwarded by the Customer's equipment when the called party answers), chargeable originating access minutes are derived from recorded minutes.

For originating calls over FGA, usage measurement begins when the originating FGA first point of switching receives an off-hook supervisory signal forwarded from the customer's point of termination. This off-hook signal may be provided by the customer's equipment before the called party answers, or forwarded by the customer's equipment when the called party answers.

The measurement of originating call usage over FGA ends when the originating FGA first point of switching receives an on-hook supervisory signal from either the originating end user has disconnected, or the customer's point of termination, whichever is recognized first by the first point of switching.

RECEIVED
MAR 0 8 2007
STATE OF ALASKA
REGULATORY COMMISSION OF ALASKA

GCI COMMUNICATION CORP.

ACCESS SERVICES

6. Switched Access Service (Cont'd)
   6.8 Rate Regulations (Cont'd)
      6.8.4 Measuring Access Minutes (Cont'd)
         (A) Feature Group A (Cont'd)

For terminating calls over FGA, usage measurement begins when the terminating FGA first point of switching receives an off-hook supervisory signal from the terminating end user's end office, indicating the terminating end user has answered. The measurement of terminating call usage over FGA end when the terminating FGA first point of switching receives an on-hook supervisory signal from either the terminating end user's end office, indicating the terminating end user has disconnected, or the customer's point of terminating, whichever is recognized first by the first point of switching.

FGA access minutes or fractions thereof, the exact value of the fraction begin a function of the switch technology where the measurement is made, are accumulated over the billing period for each line or hunt group, and are then rounded up to the nearest access minute for each line or hunt group.

Assumed minutes are used for FGA services which originate or terminate in end offices not equipped with measurement capabilities and in such cases are the chargeable access minutes. Where originating and terminating measurement capability does not exist for Feature Group A provided to the first point of switching, the number of access minutes will be assumed as set forth in the Rate Sections (as defined in Section 2.6, Rate Sections) following. (N) (N)

(B) Feature Group B

Customer traffic to end offices will be measured (i.e., recorded) or assumed by the Company at end office switches or access tandem switches. Originating and terminating calls will be measured D (i.e., recorded) or assumed by the Company to determine the basis for computing chargeable access minutes. In the event the measured customer message detail is not available from the Company, the Company will obtain the volume of access minutes from the IC, use assumed minutes as listed in the Rate Sections (as defined in Section 2.6, Rate Sections), or use an estimate based on previously known volumes. The priority as set forth above will be used in selecting the method. (N) (N)

RECEIVED
MAR 0 8 2007
STATE OF ALASKA
REGULATORY COMMISSION OF ALASKA

GCI COMMUNICATION CORP.

ACCESS SERVICES

6. Switched Access Service (Cont'd)
   6.8 Rate Regulations (Cont'd)
      6.8.4 Measuring Access Minutes (Cont'd)
         (B) Feature Group B (Cont'd)

For both originating and terminating calls over FGB the measured minutes are the chargeable access minutes.

For originating calls over FGB, usage measurement begins when the originating FGB first point of switching receives answer supervision forwarded from the customer's point of termination, indicating the customer's equipment has answered.

The measurement of originating call usage over FGB ends when the originating FGB first point of switching receives disconnect supervision from either the originating end user's end office, indicating the originating end user has disconnected, or the customer's point of termination, whichever is recognized first by the first point of switching.

For terminating calls over FGB, usage measurement begins when the terminating FGB first point of switching receives answer supervision from the terminating end user's end office, indicating the terminating end user has answered.

The measurement of terminating call usage over FGB ends when the terminating FGB first point of switching receives disconnect supervision from either the terminating end user's end office, indicating the terminating end user has disconnected, or the customer's point of termination, whichever is recognized first by the first point of switching.

FGB access minutes or fractions thereof, the exact value of the fraction being a function of the switch technology where the measurement is made, are accumulated over the billing period for each end office, and are then rounded up to the nearest access minute for each end office.

Assumed minutes are used for FGB services which originate or terminate in end offices not equipped with measurement capabilities and in such cases are the chargeable access minutes, as set forth in the Rate Sections (as defined in Section 2.6, Rate Sections). (N)

(N)

RECEIVED
MAR 0 8 2007
STATE OF ALASKA
REGULATORY COMMISSION OF ALASKA

GCI COMMUNICATION CORP.

ACCESS SERVICES

6. Switched Access Service (Cont'd)
   6.8 Rate Regulations (Cont'd)
      6.8.4 Measuring Access Minutes (Cont'd)

(C) Reserved for Future Use

(D) Feature Group D

Customer traffic to end offices will be recorded at end office switches or access tandem switches. Originating and terminating calls will be measured or imputed to determine the basis for computing chargeable access minutes. In the event the measured customer message detail is not available from the Company, the Company will obtain the volume of access minutes from the IC, use assumed minutes as listed in the Rate Sections (as defined in Section 2.6, Rate Sections), or use an estimate based on previously known volumes. The priority as set forth above will be used in selecting the method. (N)

Originating Usage

For originating calls over FGD the measured minutes are the chargeable access minutes.

For originating calls over FGD, usage measurement begins when the originating FGD first point of switching receives the first wink supervisory signal forwarded from the customer's point of termination.

The measurement of originating call usage over FGD ends when the originating FGD first point of switching receives disconnect supervision from either the originating end user's end office, indicating the originating end user has disconnected, or the customer's point of termination, whichever is recognized first by the first point of switching.

Terminating Usage

For terminating calls over FGD the chargeable access minutes are either measured or imputed.

Pursuant to:
U07-052(1)

Effective: April 24, 2007

Issued by: GCI Communication Corp.

By: Jennifer K.G. Robinson

Title: Tariffs & Licenses Manager

RECEIVED
MAR - 3 1997
ALASKA PUBLIC UTILITIES COMM.

ACCESS SERVICES

6. Switched Access Service (Cont'd)
   6.8 Rate Regulations (Cont'd)
      6.8.4 Measuring Access Minutes (Cont'd)
         (D) Feature Group D (Cont'd)

For terminating calls over FGD where measurement capability exists, the measurement of chargeable access minutes begins when the terminating FGD first point of switching receives answer supervision from the terminating end user's end office, indicating the terminating end user has answered. This measurement ends when the terminating FGD first point of switching receives disconnect supervision from either the terminating end user's end office, indicating the terminating end user has disconnected, or the customer's point of termination, whichever is recognized first by the first point of switching. For termination calls over FGD, where measurement capability does not exist, terminating FGD usage is imputed from originating usage, excluding usage from calls to closed end services or directory assistance services.

(E) Wholesale Minutes

The wholesale provider must report to the Company, the access minutes provided each wholesale user via switched wholesale services in sufficient detail to bill all applicable rate elements, as necessary. The wholesale provider's measured or imputed FGD and FGB minutes will be reduced and the wholesale user's minutes increased by the Company for reported wholesale user minutes. The Company will develop a percentage of wholesale use (PWU) for each wholesale user to be applied to wholesale provider's access trunks to determine the dedicated trunks.

In addition, the wholesale user will provide measured minutes delivered through dedicated wholesale service to the Company.

6.8.5 Applications of Rates for Extension Service

FGD WATS Access Lines are available with extensions, (additional terminations of the service at different buildings). WATS Access Line extensions are provided and charged for as Special Access Service as described in Section 7.

INFORMATIONAL FILING ONLY

RECEIVED 06/24/21

ACCESS SERVICES

6. Switched Access Service (Cont'd)
   6.8 Rate Regulations (Cont'd)
      6.8.6 Network Blocking

The customer will be notified by the Company to increase its capacity (busy hour minutes of capacity or quantities of trunks) when excessive trunk group blocking occurs on groups carrying Feature Group traffic and the measured access minutes for that hour exceed the capacity purchased. Excessive trunk group blocking occurs when the blocking thresholds stated in 6.6.6 preceding are exceeded. They are predicated on time consistent, hourly measurements over a 30-day period using the five highest days of the week, excluding national holidays.

6.8.7 Toll Free Database Access Service (T)

A Basic Query or Vertical Feature Query charge applies for each query that is launched to an Toll Free database and identifies the customer to whom the call will (T) be delivered. Query charges, as set forth in the Rate Sections (as defined in Section 2.6, Rate Sections), will only be applied by those companies whose wire centers are identified as assessing query charges in the NATIONAL EXCHANGE CARRIER ASSOCIATION, INC. TARIFF F.C.C. NO. 4. If the originating company transmits (C) the results of the query, it will assess the query charge per call. However, when the originating company is unable to do so, the next company in the call path that is able to launch and transmit the results of the query will assess the query charge. Only one query charge per call may be assessed. (C)

When Feature Group D switched access service is used for the provision of Toll Free (T) Database Access Service and the total minutes of use and/or count of queries can be (T) determined for each customer at a tandem or SSP but can not be determined by individual end office, an allocation method will be utilized to determine minutes of use and/or queries by end office and customer.

For each end office a ratio will be developed and applied against the total minutes of use and/or count of queries for a given customer as determined by the tandem or SSP. These ratios will be developed by dividing the unidentified originating Toll (T) Free minutes of use at an end office by the total unidentified originating minutes of (T) use in all end offices subtending the tandem or SSP. For example, assume:

INFORMATIONAL FILING ONLY

RECEIVED 06/24/21

ACCESS SERVICES

6. Switched Access Service (Cont'd)
   6.8 Rate Regulations (Cont'd)
      6.8.7 Toll Free Database Access Service (Cont'd) (T)

      - Three end office (EO-1, EO-2, and EO-3) subtend a tandem
        EO-1 measures 2,000 minutes of 800 series use (T)
        EO-2 measures 3,000 minutes of 800 series use (T)
        EO-3 measures 5,000 minutes of 800 series use 10,000 TOTAL (T)

      - The tandem delivers 800 series usage to two customers: (T)
        IC-A has 4,000 minutes of use
        IC-B has 6,000 minutes of use

      - The allocation ratio for EO-1 is 20%
        2,000/10,000

      - The minutes of use to be billed by EO-1 are:
        800 to IC-A (20% x 4,000)
        1,200 to IC-B (20% x 6,000) 2,000 TOTAL

   6.9 Common Switching, Transport Termination and Interim NXX Optional Features

   Following are descriptions of the various optional features that are available in lieu of, or in the addition to, the standard features provided with the Feature Groups. They are provided as Common Switching, Transport Termination or Interim NXX Translation Options.

      6.9.1 Common Switching Nonchargeable Optional Features

      The following table shows the Feature Groups with which the optional features are available.

	Option	Available Feature Groups A	B	D
(A)	Call denial on line or hunt group	X		
(B)	Service code denial on line or hunt group	X		
(C)	Hunt group arrangement	X		
(D)	Uniform call distribution arrangement	X		

RECEIVED
MAY 23 1997
ALASKA PUBLIC UTILITIES COMM.

GCI COMMUNICATION CORP.

ACCESS SERVICES

6. Switched Access Service (Cont'd)
   6.9 Common Switching, Transport Term. and Interim NXX Optional Features (Cont'd)
      6.9.1 Common Switching Nonchargeable Optional Features (Cont'd)

	Option	Available Feature Groups A	B	D
(E)	Nonhunting number for use with hunt group or uniform call distribution arrangement	X		
(F)	Automatic Number Identification (ANI)		X	X
(G)	Up to 7-digit outpusling of access digits to customer		X	
(H)	Reserved for Future Use			
(I)	Reserved for Future Use			
(J)	Reserved for Future Use			
(K)	Service Class Routing			X
(L)	Alternate Traffic Routing			X
(M)	Trunk access limitation			X
(N)	Call gapping arrangement			X
(O)	Band advance arrangement for use with Special Access Service utilized in the provision of WATS and WATS-type services	X	X	X
(P)	End office end user line service screening for use with Special Access Service utilized in the provision of WATS or WATS-type services			X
(Q)	Hunt group arrangement for use with Special Access Service utilized in the provision of WATS or WATS-type services	X	X	X
(R)	Uniform call distribution arrangement for use with Special Access Service utilized in the provision of WATS or WATS-type services	X	X	X
(S)	Nonhunting number associated with hunt group arrangement or uniform call distribution arrangement for use with Special Access Service utilized in the provision of WATS or WATS-type services	X	X	X
(T)	Digital Switched 56 Service			X

RECEIVED
MAR -3 1997
ALASKA PUBLIC UTILITIES COMM.

ACCESS SERVICES

6. Switched Access Service (Cont'd)
   6.9 Common Switching, Transport Term. and Interim NXX Optional Features (Cont'd)
      6.9.1 Common Switching Nonchargeable Optional Features (Cont'd)

(A) Call Denial on Line or Hunt Group: This option allows for the screening of terminating FGA calls. There are two screening arrangements available with this option as follows: 1) limiting terminating calls for completion to only 411 or 555-1212 whichever is available, 611, 911, 800 and a Company specified set of NXXs within the Company local exchange calling area of the dial tone office in which the arrangement is provided or, 2) limiting terminating calls to completion to only the NXXs associated with all end offices in the local calling area, i.e., the call cannot be further switched or routed out of the local calling area nor will calls be completed to 411 or 555-1212 whichever is available, 611, 911, or 800. All other calls are routed to a reorder tone or recorded announcement. Arrangement 1 is provided in all Company electronic end offices and, where available, in electromechanical end office. Arrangement 2 is provided where available. This feature is available with FGA.

(B) Service Code on Line or Hunt Group: This option allows for the screening of terminating calls within the local calling area, and for disallowing completion of calls to)-, 555, and N11 (e.g., 411, 611, and 911). This feature is provided where available in all Company end offices. It is available with Feature Group A.

(C) Hunt Group Arrangement: This option provides the ability to sequentially access one of two or more line side connections in the originating direction when the access code of the line group is dialed. This feature is provided in all Company end offices. It is available with FGA. All FGA access services in the same hunt group must provide off-hook supervisory signaling from the same point in time in the call sequence, i.e., all off-hook supervisory signals must either be provided by the customer's equipment before the called party answers or all must be forwarded by the customer's equipment when the called party answers.

(D) Uniform Call Distribution Arrangement: This option provides a type of multiline hunting arrangement which provides for an even distribution of calls among the available lines in a hunt group. Where available, this feature is provided in Company electronic end offices only. It is available with FGA.

RECEIVED
MAR - 3 1997
ALASKA PUBLIC UTILITIES COMM.

ACCESS SERVICES

6. Switched Access Service (Cont'd)
   6.9 Common Switching, Transport Term. and Interim NXX Optional Features (Cont'd)
      6.9.1 Common Switching Nonchargeable Optional Features (Cont'd)

(E) Nonhunting Number for Use with Hunt Group or Uniform Call Distribution Arrangement: This option provides access to an individual line within a multiline hunt or uniform call distribution group. When the nonhunting number is dialed, access is provided when it is idle, or busy tone is provided when it is busy. Where available, this feature is provided in Telephone Company electronic end offices only. It is available with Feature Group A.

(F) Automatic Number Identification (ANI)

(1) This option provides the automatic transmission of a seven digit or ten digit number and information digits to the customer designated premises for originating calls to identify the calling station. The ANI feature is an end office software function which is associated on a call-by-call basis with:

(a) all individual transmission paths in a trunk group routed directly between an end office and a customer designated premises or, where technically feasible, with
(b) all individual transmission paths in a trunk group between an end office and an access tandem, and a trunk group between an access tandem and a customer designated premises.

(2) The seven digit ANI telephone number is generally available with FGB. With these Feature Groups, technical limitations may exist in Company switching facilities which require ANI to be provided only on a directly trunked basis. ANI will be transmitted on all calls except those originating from multiparty lines, coin stations and coinless pay telephones FGB, or when an ANI failure has occurred.

(3) The ten digit ANI telephone number is only available with FGD. The ten digit ANI telephone number consists of the Number Plan Area (NPA) plus the seven digit ANI telephone number. The ten digit ANI telephone number will

RECEIVED
MAR - 3 1997
ALASKA PUBLIC UTILITIES COMM.

ACCESS SERVICES

6. Switched Access Service (Cont'd)
   6.9 Common Switching, Transport Term. and Interim NXX Optional Features (Cont'd)
      6.9.1 Common Switching Nonchargeable Optional Features (Cont'd)
         (F) Automatic Number Identification (ANI) (Cont'd)
         (3) (Cont'd)

be transmitted on all calls except those identified as multiparty line or ANI failure, in which case only the NPA will be transmitted (in addition to the information digit described below).

(4) ANI is provided from end offices where message detail recording is not required by the Company; as with 800 service. ANI is not provided from end offices where the Company forwards ANI to its recording equipment.

(5) Where ANI detail cannot be provided, e.g., on calls from 4 and 8 party services, information digits will be provided to the customer.

The information digits identify:

(a) telephone number is the station billion number - no special treatment required,
(b) multiparty line-telephone is a 4- or 8- party line and cannot be identified - number must be obtained via an operator or in some other manner,
(c) ANI failure has occurred in the end office switch prevents identification of calling telephone number - must be obtained by operator or in some other manner,
(d) hotel/motel originated call which requires room number identification,
(e) coinless station, hospital, inmate, etc. call which requires special screening or handling by the customer, and

RECEIVED
MAR - 3 1997
ALASKA PUBLIC UTILITIES COMM.

ACCESS SERVICES

6. Switched Access Service (Cont'd)
   6.9 Common Switching, Transport Term. and Interim NXX Optional Features (Cont'd)
      6.9.1 Common Switching Nonchargeable Optional Features (Cont'd)
         (F) Automatic Number Identification (ANI) (Cont'd)
            (5) (Cont'd)

(f) call is an Automatic Identified Outward Dialed (AIOD) call from customer premises equipment. The AIOD ANI telephone number is the listed telephone number of the customer and is not the telephone number of the calling party.

These ANI information digits are generally available with FGB and FGD.

(6) Additional ANI information digits are available with Feature Group D also. They include:

(a) Inter local calling area restricted - telephone number is identified line

(b) Inter local calling area restricted - hotel/motel line

(c) Inter local calling area restricted - coinless, hospital, inmate, etc., line

These information digits will be transmitted as agreed to by the customer and the Company.

(G) Up to 7 Digit Outpulsing of Access Digits to Customer: This option provides for the end office capability of providing up to 7 digits of the uniform access code (950-1/0XXX) to customer designated premises. The Customer can request that only some of the digits in the access code be forwarded. The access code digits would be provided to the customer designated premises using multi-frequency signaling and transmission of the digits would precede the forwarding of ANI if that feature were provided. This feature is available with Feature Group B.

RECEIVED
MAR - 3 1997
ALASKA PUBLIC UTILITIES COMM.

ACCESS SERVICES

6. Switched Access Service (Cont'd)
   6.9 Common Switching, Transport Term. and Interim NXX Optional Features (Cont'd)
      6.9.1 Common Switching Nonchargeable Optional Features (Cont'd)

(H) Reserved for Future Use

(I) Reserved for Future Use

(J) Reserved for Future Use

(K) Service Class Routing: This option provides the capability of directing originating traffic from an end office to a trunk group to a customer designated premises, based on the line class of service (e.g., coin, multiparty or hotel/motel), service prefix indicator (e.g., -0, 0+, 01+, or 011+) or Service Access Code (e.g., 800 or 900). It is provided in suitably equipped end office or access tandem switches. It is available with Feature Group D.

(L) Alternate Traffic Routing: This option provides the capability of directing originating traffic from an end office (or appropriately equipped access tandem) to a trunk group (the "high usage" group) to a customer designated premises until that group is fully loaded, and then delivering additional originating traffic (the "overflowing" traffic) from the same end office or access tandem to a different trunk group (the "final" group) to a second customer designated premises. The customer shall specify the last trunk CCS desired for the high usage group. It is provided in suitably equipped end office or access tandem switches. It is available with FGD.

(M) Trunk Access Limitation: This option provides for the routing of originating 900 service calls to a specified number of transmission paths in a trunk group, in order to limit (choke) the completion of such traffic to the customer. Calls to the designated service which could not be completed over the subset of transmission paths of the trunk group, i.e., the choked calls, would be rerouted to reorder tone. It is provided in all Company electronic end offices and where available in electromechanical end offices. It is available with Feature Group D.

RECEIVED
MAR - 3 1997
ALASKA PUBLIC UTILITIES COMM.

ACCESS SERVICES

6. Switched Access Service (Cont'd)
   6.9 Common Switching, Transport Term. and Interim NXX Optional Features (Cont'd)
      6.9.1 Common Switching Nonchargeable Optional Features (Cont'd)

(N) Call Gapping Arrangement: This option, provided in suitably equipped end office switches, provides for the routing of originating calls to 900 service to be switched in the end office to all transmission paths in a trunk group at a prescribed rate of flow, e.g., one call every five seconds, in order to limit (choke) the completion of such traffic to the customer. Calls to the designated service which are denied access by this feature, i.e., the choked calls, would be routed to a no-circuit announcement. It is provided in selected Feature Group D equipped end office and is available only with Feature Group D.

(O) Band Advance Arrangement for Use with Special Access Service Utilized in the Provision of WATS or WATS-Type Services: This option, which is provided in association with two or more Special Access Service groups, provides for the automatic overflow of terminating calls to a second Special Access Service group, when the first group has exceeded its call capacity. This option is available with Feature Groups A, B and D.

(P) End Office User Line Service Screening for Use with Special Access Service Utilized in the Provision of WATS or WATS-Type Services: This option provides the ability to verify that an end user has dialed a called party address (by screening the called NPA and/or NXX on the basis of geographical bands selected by the Company) which is in accordance with that end user's service agreement with the customer, e.g., WATS. This option is provided in all Company electronic end offices and, where available, in electromechanical end offices, which are designated as WATS Serving Offices. It is available with FGD.

(Q) Hunt Group Arrangement for Use with Special Access Service Utilized in the Provision of WATS or WATS-Type Services: This option provides the ability to sequentially access one or two or more Special Access Services utilized in the provision of WATS services (e.g., 800 Service Special Access services) in the terminating direction, when the hunting number of the Special Access Service group is forwarded from the customer to the Company. This feature is provided in all Company designated WATS Service Offices. It is available with Feature Groups A, B and D.

RECEIVED
MAR - 3 1997
ALASKA PUBLIC UTILITIES COMM.

ACCESS SERVICES

6. Switched Access Service (Cont'd)
   6.9 Common Switching, Transport Term. and Interim NXX Optional Features (Cont'd)
      6.9.1 Common Switching Nonchargeable Optional Features (Cont'd)

(R) Uniform Call distribution Arrangement of Use with Special Access Service Utilized in the Provision of WATS or WATS-Type Services: This option provides a type of multiline hunting arrangement which provides for an even distribution of terminating calls among the available Special Access Services utilized in the provision of WATS or WATS-Type Services in the hunt group. Where available, this feature is only provided in Company designated WATS Serving Offices. It is available with Feature Groups A, B and D.

(S) Nonhunting Number Associated with Hunt Group Arrangement or Uniform Call Distribution Arrangements for Use with Special Access Service Utilized in the Provision of WATS or WATS-Type Services: This option provides an arrangement, for an individual Special Access Service Utilized in the provision of WATS or WATS-Type Services within a multiline hunt or uniform call distribution group, that provides access to that Special Access Service within the hunt or uniform call distribution group, when it is idle or provides busy tone when it is busy, when the nonhunting number s dialed, without hunting to the next idle number. Where available, this feature is only provided in Company designated WATS Servicing Offices. It is available with Feature Groups A, B and D.

(T) Digital Switched 56 Service: This option provides for a connection between a customer's premise and a suitable equipped end user's premise which uses end office switching and facilities capable of transmitting digital data up to 56 Kilobits per second. Digital switched 56 Service is only available in appropriately provisioned Feature Group D offices.

6.9.2 Transport Termination Nonchargeable Optional Features

(A) Rotary Dial Station Signaling: This option provides for the transmission of called party address signaling from rotary dial stations to the customer designated premises for originating calls. This option is provided in the form of a specific type of Transport Termination. It is available with Feature Group B, only on a directly trunked basis.

INFORMATIONAL FILING ONLY

RECEIVED 06/24/21

ACCESS SERVICES

6. Switched Access Service (Cont'd)
   6.9 Common Switching, Transport Term. and Interim NXX Optional Features (Cont'd)
      6.9.2 Transport Termination Nonchargeable Optional Features (Cont'd)

(B) Reserved for Future Use

(C) Operator Trunk - Full Feature: This option provides the initial coin return control function to the customer's operator. It is available with Feature Group D and is provided as a trunk type of Transport Termination.

6.9.3 Chargeable Optional Features

(A) Interim NXX Translation: This service is an originating offering utilizing trunk side Switched Access Service and provides a customer identification function based on the dialed SAC and NXX code.

For example, when a 1+900+NXX-XXXX call is originated by an end user, the Company will perform the customer identification function based on the dialed digits to determine the customer location to which the call is to be routed. If the call originates from an end office switch not equipped to provide the customer identification function, the call will be routed to an office at which the function is available. Once customer identification has been established, the call will be routed to that customer. Calls originating from an end office switch at which the customer identification function is performed, but to which the customer has not ordered Interim NXX Translation, will be blocked. Calls to a 900 number from coin telephones, 0+, 0-, 10XXX, Inmate Service, Hotel/Motel Service and calling card calls will be blocked. The manner in which Interim NXX Translation is provided is dependent on the status of the end office from which the service is provided (i.e., equipped with equal access capabilities or not equipped with equal access capabilities).

(B) Toll Free Database Service: Toll Free Database Access Service is provided with FGD switched access service. When a 1+800 series+NXX-XXXX call is originated by an end user, the Company will utilize the Signaling System 7 (SS7) network to query a Toll Free database to perform the identification function. The call will then be routed to the identified customer over FGD switched access. (T) (T) (T)

INFORMATIONAL FILING ONLY

RECEIVED 06/24/21

GCI COMMUNICATION CORP.

ACCESS SERVICES

6. Switched Access Service (Cont'd)
   6.9 Common Switching, Transport Term. and Interim NXX Optional Features (Cont'd)
      6.9.3 Chargeable Optional Features (Cont'd)
         (B) Toll Free Database Service (Cont'd) (T)

The manner in which Toll Free database access service is provided is dependent on the availability of SS7 service at the end office from which the service is provided as outlined following: (T)

- When Toll Free database access service originates at an end office equipped with Service Switching Point (SSP) capability for querying centralized databases, all such service will be provisioned from that end office. (T) (T)

- When Toll Free database access service originates at an end office not equipped with SSP customer identification capability, the Toll Free call will be delivered to the access tandem on which the end office is homed and which is equipped with the SSP feature to query centralized databases. (T) (T)

- When Toll Free database access service originates at an end office not equipped with SSP customer identification capability and the access tandem on which the end office is homed is not equipped with the SSP feature, or the end office is not homed to an access tandem, the Company will make special arrangements to query centralized databases. (T) (T)

Query charges as set forth in the Rate Sections (as defined in Section 2.6, Rate Sections), following are in addition to those charges applicable for the Feature Group D switched access service.

RECEIVED
MAR - 3 1997
ALASKA PUBLIC UTILITIES COMM.

GCI COMMUNICATION CORP.

ACCESS SERVICES

7. Special Access Service

7.1 General

Special Access Service provides a transmission path to connect customer designated premises, directly, through a Company hub or hubs where bridging or multiplexing functions are performed, or to connect a customer designated premises and a WATS Serving Office. Special Access Service includes all exchange access not utilizing Company end office switches.

The connections provided by Special Access Service can be either analog or digital. Analog connections are differentiated by spectrum and bandwidth. Digital connections are differentiated by bit rate.

7.1.1 Channel Types

There are five types of channels used to provide Special Access Services. Each type has its own characteristics. All are subdivided by one or more of the following:

- Transmission specifications,
- Bandwidth,
- Speed (i.e., bit rate),
- Spectrum

Customers can order a basic channel and select from a list of those available transmission parameters and channel interfaces that they desire in order to meet specific communications requirements.

For purposes of ordering channels, each has been identified as a type of Special Access Service. However, such identification is not intended to limit a customer's use of the channel nor to imply that the channel is limited to a particular use.

Following is a brief description of each type of channel:

Voice Grade - a channel for the transmission of analog signals within an approximate bandwidth of 300 to 3000 Hz.

RECEIVED
MAR - 3 1997
ALASKA PUBLIC UTILITIES COMM.

ACCESS SERVICES

7. Special Access Service (Cont'd)
   7.1 General (Cont'd)
      7.1.1 Channel Types (Cont'd)

Program Audio - a channel for the transmission of audio signals. The nominal frequency bandwidths are from 200 to 3500 Hz, from 100 to 5000 Hz, from 50 to 8000 Hz, or from 50 to 15000 Hz.

Video - a channel for the transmission of standard 525 line 60 field monochrome or National Television Systems Committee color video signal and one or two associated 5 or 15 kHz audio signals. The bandwidth is either 30 - 4.5 MHz or 30 - 6.6 MHz.

Digital Data - a channel for the digital transmission of synchronous serial data at rates of 2.4, 4.8, 9.6, 19.2, 56, or 64 kbps.

High Capacity - a channel for the transmission of isochronous serial digital data at rates of 1.544, 3.152, 6.312, 44.736 or 274.176 Mbps.

Detailed descriptions of each of the channel types are provided in 7.4 through 7.9 following.

The customer also has the option of ordering Voice Grade and High Capacity facilities (i.e., 1.544 Mbps, 3.152 Mbps, 6.312 Mbps, 44.736 Mbps and 274.176 Mbps) to Company hubs for multiplexing to individual channels of a lower capacity or bandwidth. Descriptions of the types of multiplexing available at the hubs, as well as the number of individual channels which may be derived from each type of facility are set forth in 7.2.5 following. Additionally, the customer may specify optional features for the individual channels derived from the facility to further tailor the channel to meet specific communications requirements. Descriptions of the optional features and functions available are set forth in 7.2.1 following.

For example, a customer may order a 3.152 Mbps High Capacity channel from a customer designated premises to a Company hub for multiplexing to two 1.544 Mbps channels. The 1.544 Mbps channels may be further multiplexed at the same or a different hub to Voice Grade channels or may be extended to other customer designated premises or hubs. Optional features may be added to either the 1.544 Mbps or the Voice Grade channels.

RECEIVED
MAR - 3 1997
ALASKA PUBLIC UTILITIES COMM.

ACCESS SERVICES

7. Special Access Service (Cont'd)
   7.1 General (Cont'd)

   7.1.2 Service Descriptions

For the purposes of ordering, there are five categories of Special Access Service. These are:

Service Designator	Codes
Voice	VG
Program Audio	AP
Video	TV
Digital	DA
High Capacity	HC

Each service consists of a basic channel to which a technical specifications package (customized or pre-defined), channel interface(s) and, when desired, optional features and functions are added to construct the service desired by the customer. Technical specifications packages are described in Section 11.2 following, optional features and functions are described in this section. Channel interfaces are described in 11.2 following.

Customized technical specifications packages will be provided where technically feasible. If the Company determines that the requested parameter specifications are not compatible, the customer will be advised and given the opportunity to change the order.

When a customized channel is ordered the customer will be notified whether Additional Engineering Charges apply. In such cases, the customer will be advised and given the opportunity to change the order.

The channel descriptions provided in 7.4 through 7.9 following, specify the characteristics of the basic channel and indicate whether the channel is provided between customer designated premises, between a customer designated premises and a Company hub where bridging or multiplexing functions are performed, between hubs, or between a customer designated premises and a WATS Serving Office.

RECEIVED
MAR - 3 1997
ALASKA PUBLIC UTILITIES COMM.

ACCESS SERVICES

7. Special Access Service (Cont'd)
   7.1 General (Cont'd)
      7.1.2 Service Descriptions (Cont'd)

(A) Information pertaining to the technical specifications packages indicates the transmission parameters that are available with each package. This information is displayed in matrices set forth in 11.2 following.

(B) Channel interfaces at each Point of Termination on a two-point service may be symmetrical or asymmetrical. On a multipoint service they may also be symmetrical or asymmetrical, but communications can only be provided between compatible channel interfaces. Only certain channel interfaces are compatible. These are set forth in 11.2 following, in a combination format.

(C) Only certain channel interface combinations are available with the predefined technical specifications packages. These are delineated in the Technical References set forth in (F) following. When a customized channel is requested, all channel interface combinations available with the specified type of service are available with the customized channel.

(D) The optional features and functions available with each type of Special Access Service are described in this section. The optional features and functions information also indicates with which technical specifications packages they are available. Such information is displayed in matrices set forth in 11.3 following with the optional feature or function listed down the left side and the technical specifications package listed across the top.

(E) The Company will maintain services installed prior to April 1, 1985, at their existing transmission specifications provided such performance specifications do not exceed the standards listed in this provision. Those services exceeding the standards listed will be maintained at the performance levels specified in this tariff.

(F) All services installed after April 1, 1985 will conform to the transmission specifications standards contained in this tariff or in the following Technical References for each category of service:

RECEIVED

MAY 23 1997

ALASKA PUBLIC UTILITIES COMM.

ACCESS SERVICES

7. Special Access Service (Cont'd)
   7.1 General (Cont'd)
      7.1.2 Service Descriptions (Cont'd)
         (F) (Cont'd)

Voice Grade	TR-NWT-000335, PUB 41004, Table 4
Digital Data	TR-NWT-000341
For 2.4, 4.8, 9.6 & 56.0 Kbps	PUB 62310
For 19.2 Kbps	INC Bulletin CB-INC-100
For 64.0 Kbps	GR-342-CORE
Program Audio	GR-337-CORE
Video	GR-338-CORE
High Capacity	GR-342-CORE GR-54-CORE PUB 41451

7.1.3 Service Configurations

There are two types of service configurations over which Special Access Services are provided: two-point service and multipoint service.

(A) Two-Point Service: A two-point service connects two customer designated premises, either on a directly connected basis or through a hub where multiplexing functions are performed, or a customer designated premises and a WATS Serving Office (WSO).

Applicable rate elements are: Channel Terminations, Channel Mileage (as applicable), Optional Features and Functions (when applicable)

A Special Access Surcharge, as set forth in 7.3 following, may be applicable.

The following diagram depicts a two-point Voice Grade service connecting two Customer Designated Premises (CDP). The service is provided with C-Type conditioning.

RECEIVED

MAR - 3 1997

ALASKA PUBLIC UTILITIES COMM.

ACCESS SERVICES

7. Special Access Service (Cont'd)
   7.1 General (Cont'd)
      7.1.3 Service Configurations (Cont'd)
         (A) (Cont'd)

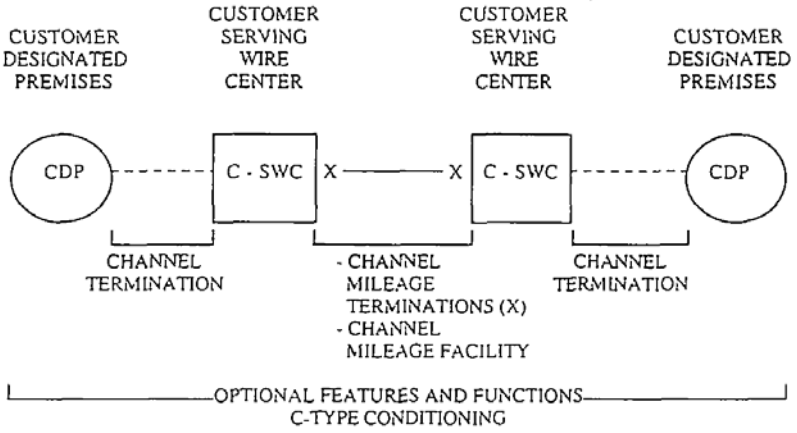

Applicable rate elements are:
- Channel Terminations (applicable one (1) per CDP)
- Channel Mileage
  - 2 Channel Mileage Termination plus
  - 1 section, channel Mileage Facility per mile
- C-Type conditioning Optional Feature

RECEIVED
MAR - 3 1997
ALASKA PUBLIC UTILITIES COMM.

ACCESS SERVICES

7. Special Access Service (Cont'd)
   7.1 General (Cont'd)
      7.1.3 Service Configurations (Cont'd)
         (A) (Cont'd)

The following diagram depicts a two-point Voice Grade service connecting a customer designated premises to a WATS serving office.

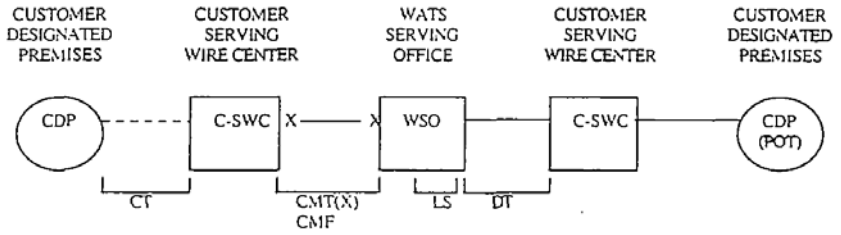

CT - Channel Termination
CMT - Channel Mileage Termination
CMF - Channel Mileage Facility
LS - Local Switching
DT - Dedicated Transport

Applicable rate elements for Special Access are:
- Channel Termination
- Channel Mileage
  - 2 Channel Mileage Termination plus
  - 1 section, Channel Mileage Facility per mile
- Special Access Surcharge*

*May not apply if exemption certification is provided.

RECEIVED
MAR - 3 1997
ALASKA PUBLIC UTILITIES COMM.

ACCESS SERVICES

7. Special Access Service (Cont'd)
   7.1 General (Cont'd)
      7.1.3 Service Configurations (Cont'd)

(B) Multipoint Service: Multipoint service connects three or more customer designated premises through one or more Company hubs. Only certain types of Special Access Service are provided as multipoint service. These are so designated in the descriptions for the appropriate channel.

The channel between hubs (i.e., bridging locations) on a multipoint service is a mid-link. There is no limitation on the number of mid-links available with a multipoint service. However, when more than three mid-links in tandem are provided the quality of the overall service may be degraded.

Multipoint service utilizing a customized technical specifications package, as set forth in 7.1.2 preceding and 11.2 following, will be provided when technically possible. If the Company determines that the requested characteristics for a multipoint service are not compatible, the customer will be advised and given the opportunity to change the order.

When ordering, the customer will specify the desired bridging hub(s). NATIONAL EXCHANGE CARRIER ASSOCIATION, INC. TARIFF FCC NO. 4 identifies serving wire centers, hub locations and the type of bridging functions available.

Applicable Rate Elements are: Channel Terminations (one per customer designated premises), Channel Mileage (as applicable between the serving wire center for each customer designated premises and the hub and between hubs), Bridging, Additional Optional Features and Functions (when applicable).

The Special Access Surcharge, as set forth in 7.3 following, may be applicable.

RECEIVED
MAR - 3 1997
ALASKA PUBLIC UTILITIES COMM.

GCI COMMUNICATION CORP.

ACCESS SERVICES

7. Special Access Service (Cont'd)
   7.1 General (Cont'd)
      7.1.3 Service Configurations (Cont'd)
         (B) (Cont'd)

Example: Voice Grade multipoint service connecting four customer designated premises (CDP) via two customer specified bridging hubs.

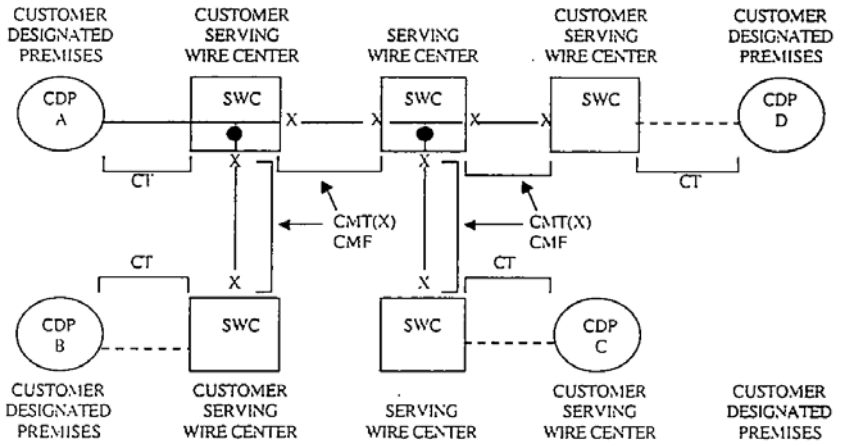

CT - Channel Termination
CMT - Channel Mileage Termination
CMF - Channel Mileage Facility
● - Bridging Port

Applicable rate elements are:
- Channel Termination (4 applicable)
- Channel Mileage
  - 2 Channel Mileage Termination per Channel Mileage Facility section for a total of 8 plus
  - 4 sections, Channel Mileage Facility per mile
- Bridging Optional Feature (5 applicable, i.e., each bridge port)

RECEIVED
MAR - 3 1997
ALASKA PUBLIC UTILITIES COMM.

ACCESS SERVICES

7. Special Access Service (Cont'd)
   7.1 General (Cont'd)

7.1.4 Alternate Use

Alternate Use occurs when a service is arranged by the Company so that the customer can select different types of transmission at different times. A customer may use a service in any privately beneficial manner. However, where technical or engineering changes are required to effectuate an alternate use, the Company will make such special arrangements available on an individual case basis.

The arrangement required to transfer the service from one operation to the other (i.e., the transfer relay and control leads) will be rated and provided on an individual case basis. The customer will pay the stated tariff rates for the Access Service rate elements for the service ordered [i.e., Channel Terminations, Channel Mileage (as applicable) and Optional Features and Functions (if any)].

7.1.5 Special Facilities Routing

A customer may request that the facilities used to provide Special Access Service be specially routed. The regulations, rates and charges for Special Facilities Routing (i.e., Avoidance, Diversity and Cable-Only) are set forth in Section 8 following.

7.1.6 Design Layout Report

At the request of the customer, the Company will provide to the customer the make-up of the facilities and services provided under this tariff as Special Access Service to aid the customer in designing its overall service. This information will be provided in the form of a Design Layout Report. The Design Layout Report will be provided to the customer at no charge, and will be reissued or updated whenever these facilities are materially changed.

7.1.7 Acceptance Testing

At no additional charge, the Company will, at the customer's request, cooperatively test the following at the time of installation:

RECEIVED
MAR - 3 1997
ALASKA PUBLIC UTILITIES COMM.

ACCESS SERVICES

7. Special Access Service (Cont'd)
   7.1 General (Cont'd)
      7.1.7 Acceptance Testing (Cont'd)

(A) For Voice Grade analog services, the acceptance test will include tests for loss, 3-tone slope, DC continuity, operational signaling, C-notched noise, and C-message noise when these parameters are applicable and specified in the order of service. Additionally, for Voice Grade services, a balance (improved loss) test will be made if the customer has ordered the improved loss optional feature.

(B) For other analog services (i.e. Program Audio and Video) and for digital services (i.e., Digital Data and High Capacity), acceptance tests will include tests applicable to the service as specified by the customer in the order for service.

In addition to the above tests, Additional Cooperative Acceptance Testing for Voice Grade service to test other parameters is available at the customer's request. All test results will be made available to the customer upon request.

7.1.8 Ordering Options and Conditions

Special Access Service is ordered under the Access Order provisions set forth in Section 5 preceding. Also included in that section are other charges which may be associated with ordering Special Access Service (e.g., Service Date Change Charges, Cancellation Charges, etc.).

7.2 Rate Regulations

This section contains the specific regulations governing the rates and charges that apply for Special Access.

7.2.1 Rate Categories

There are three basic rate categories which apply to Special Access Service:
- Channel Terminations (described in 7.2.1(A) following)
- Channel Mileage (described in 7.2.1(B) following)
- Optional Features and Functions (described in 7.2.1(C) following.)

RECEIVED
AUG 2 6 2009
STATE OF ALASKA
REGULATORY COMMISSION OF ALASKA

GCI COMMUNICATION CORP.

ACCESS SERVICES

7. Special Access Service (Cont'd)
   7.2 Rate Regulations (Cont'd)
      7.2.1 Rate Categories (Cont'd)

(A) Channel Termination: The Channel Termination rate category recovers the costs associated with the communications path between a customer designated premises and the serving wire center of that premises. Included as part of the Channel Termination is a standard channel interface arrangement which defines the technical characteristics associated with the type of facilities to which the access service is to be connected at the Point of Termination (POT) and the type of signaling capability, if any. The signaling capability is provided as an optional feature as set forth in (C) following. One Channel Termination charge applies per customer designated premises at which the channel is terminated. This charge will apply even if the customer designated premises and the serving wire center are collocated in a Company building, unless otherwise noted. (N)

(B) Channel Mileage: The Channel Mileage rate category recovers the costs associated with the end office equipment and the transmission facilities between the serving wire centers associated with two customer designated premises, between a serving wire center associated with a customer designated premises and a Company hub or between two Company hubs. Channel Mileage rates are made up of the Channel Mileage Facility rate and the Channel Mileage Termination rate.

(1) Channel Mileage Facility: The Channel Mileage Facility rate recovers the per mile cost for the transmission path which extends between the Company serving wire centers and/or hub(s).

(2) Channel Mileage Termination: The Channel Mileage Termination rate recovers the cost for end office equipment associated with terminating the facility (i.e., basic circuit equipment and terminations at serving wire centers and hubs). The Channel Mileage Termination rate will apply at the serving wire center(s) for each customer designated premises and Company hub where the channel is terminated. If the Channel Mileage is between Company bridging hubs, the Channel Mileage Termination rate will apply per Company designated hub. If the Channel Mileage is between the serving wire center for a customer designated premises and a WATS Serving Office, the Channel

RECEIVED
MAR - 3 1997
ALASKA PUBLIC UTILITIES COMM.

ACCESS SERVICES

7. Special Access Service (Cont'd)
   7.2 Rate Regulations (Cont'd)
      7.2.1 Rate Categories (Cont'd)
         (B) Channel Mileage (Cont'd)
            (2) (Cont'd)

Mileage Termination rate will apply at both the serving wire center associated with the customer designated premises and the WATS Serving Office. When the Channel Mileage Facility is zero (i.e., collocated serving wire centers), neither the Channel Mileage Facility rate nor the Channel Mileage Termination rate will apply.

(C) Optional Features and Functions: The Optional Features and Functions rate category recovers the costs associated with optional features and functions which may be added to a Special Access Service to improve its quality or utility to meet specific communications requirements. These are not necessarily identifiable with specific equipment, but rather represent the end result in terms of performance characteristics which may be obtained. These characteristics may be obtained by using various combinations of equipment. Although the equipment necessary to perform a specified function may be installed at various locations along the path of the service, they will be charged for as a single rate element.

Examples of Optional Features and Functions that are available include, but are not limited to, the following: Signaling Capability, Hubbing Functions, Conditioning

A hub is a Company designated serving wire center at which bridging or multiplexing functions are performed. The bridging functions performed are to connect three or more customer designated premises in a multipoint arrangement. The multiplexing functions are to channelize analog or digital facilities to individual services requiring a lower capacity or bandwidth. NATIONAL EXCHANGE CARRIER ASSOCIATION TARIFF, INC. F.C.C. NO. 4 identifies serving wire centers, hub locations and the type of bridging or multiplexing functions available.

Descriptions for each of the available Optional Features and Functions are set forth in 7.4 through 7.8 following.

RECEIVED
MAR - 3 1997
ALASKA PUBLIC UTILITIES COMM.

ACCESS SERVICES

7. Special Access Service (Cont'd)
   7.2 Rate Regulations (Cont'd)

7.2.2 Types of Rates and Charges

There are three types of rates and charges. These are monthly rates, daily rates, and nonrecurring charges. The rates and charges are described as follows:

(A) Monthly Rates: Monthly rates are recurring rates that apply each month or fraction thereof that a Special Access Service is provided. For billing purposes, each month is considered to have 30 days.

(B) Daily Rates: Daily rates are recurring rates that apply to each 24 hour period or fraction thereof that a Program Audio or Video Special Access Service is provided for part-time use. For purposes of applying daily rates, the 24 hour period is not limited to a calendar day.

Part-time Video or Program Audio Service provided within a consecutive 30 day period will be charged the daily rate, not to exceed the monthly rate. For each day or partial day after a consecutive 30 day period of service, a charge equal to 1/30th of the monthly rate shall apply.

(C) Nonrecurring Charges: Nonrecurring charges are one-time charges that apply for specific work activity (i.e., installation or change to an existing service). The types of nonrecurring charges that apply for Special Access Service are: installation of service, installation of optional features and functions, and service rearrangements. These charges are in addition to the Access Order Charge.

(1) Installation of Service: Nonrecurring charges apply to each service installed. The nonrecurring charges for the installation of service are set for each channel type as a nonrecurring charge for the Channel Termination.

(2) Installation of Optional Features and Functions: When optional features and functions are installed coincident with the initial installation of service, no separate nonrecurring charge is applicable. When optional features and functions are installed or changed subsequent to the installation of service, an Access Order Charge will apply per order.

RECEIVED

MAR - 3 1997

ALASKA PUBLIC UTILITIES COMM.

ACCESS SERVICES

7. Special Access Service (Cont'd)
   7.2 Rate Regulations (Cont'd)
      7.2.2 Types of Rates and Charges (Cont'd)
         (C) Nonrecurring Charges (Cont'd)

(3) Service Rearrangements: Service rearrangements are changes to existing (installed) services which may be administrative only in nature, as set forth following, or that involve actual physical change to the service. Changes to pending orders are set forth in Section 5 preceding.

Changes in the physical location of the point of termination or customer designated premises are moves as set forth in 7.2.3 following.

Changes in the type of service or Channel Termination which result in a change of the minimum period requirement (see 7.2.4) will be treated as a discontinuance of the service and an installation of a new service.

Changes in ownership or transfer of responsibility from one customer to another will be treated as a discontinuance of the service and an installation of a new service. In the event the change in ownership or transfer of responsibility is as set forth in the Assignment of Transfer of Services section of this tariff, 2.1.2(A), preceding where there is no change in facilities or arrangements, the change will be treated as an administrative change.

Administrative changes will be made without charge(s) to the customer. Administrative changes are as follows:

- Change of customer name,
- Change of customer or customers' end user premises address when the change of address is not a result of physical relocation of equipment,
- Change in billing data (name, address, or contact name or telephone number),
- Change of agency authorization,
- Change of customer circuit identification,
- Change of billing account number,
- Change of customer test line number,

RECEIVED
MAR - 3 1997
ALASKA PUBLIC UTILITIES COMM.

ACCESS SERVICES

7. Special Access Service (Cont'd)
   7.2 Rate Regulations (Cont'd)
      7.2.2 Types of Rates and Charges (Cont'd)
         (C) Nonrecurring Charges (Cont'd)
            (3) Service Rearrangements (Cont'd)

- Change of customer or customer's end user contact name or telephone number, and
- Change of jurisdiction.

All other service rearrangements will be charged as follows:

- If the change involves the addition of other customer designated premises to an existing service, the nonrecurring charge for the channel termination rate element will apply. The charge(s) will apply only for the location(s) that is being added. The charge(s) will be in addition to an Access Order Charge.

- If the change involves the addition of an optional feature or function, or if the change involves changing the type of signaling on a Voice Grade service, and for all other changes, the Access Order Charge will apply.

7.2.3 Moves

A move involves a change in the physical location of one of the following: The Point of Termination at the customer's premises, and The customer's premises

The charges for the move are dependent on whether the move is to a new location within the same building or to a different building.

(A) Moves Within the Same Building: When the move is to a new location within the same building, the charge for the move will be an amount equal to one half of the nonrecurring (i.e., installation) charge for the service termination affected. There will be no change in the minimum period requirements. This charge is in addition to the Access Order Charge.

RECEIVED
MAR - 3 1997
ALASKA PUBLIC UTILITIES COMM.

ACCESS SERVICES

7. Special Access Service (Cont'd)
   7.2 Rate Regulations (Cont'd)
      7.2.3 Moves (Cont'd)

(B) Moves To a Different Building: Moves to a different building will be treated as a discontinuance and start of service and all associated nonrecurring charges will apply. New minimum period requirements will be established for the new services. The customer will also remain responsible for satisfying all outstanding minimum period charges for the discontinued service.

7.2.4 Mileage Measurement

The mileage to be used to determine the monthly rate for the Channel Mileage Facility is calculated on the airline distance between the locations involved, i.e., the serving wire centers associated with two customer designated premises, a serving wire center associated with a customer designated premises and a Company hub, two Company hubs, or between the serving wire center associated with a customer designated premises and a WATS Serving Office.

The serving wire center associated with a customer designated premises is the serving wire center from which this customer designated premises would normally obtain dial tone.

Mileage charges are shown with each channel type. To determine the rate to be billed, first compute the mileage using the V&H coordinates method, as set forth in NATIONAL EXCHANGE CARRIER ASSOCIATION, INC., TARIFF FCC No. 4, then multiply the resulting number of miles times the Channel Mileage Facility per mile rate, and add the Channel Mileage Termination rate for each termination. When the calculation results in a fraction of a mile, always round up to the next whole mile before determining the mileage and applying the rates.

When hubs are involved, mileage is computed and rates applied separately for each section of the Channel Mileage, i.e., customer designated premises serving wire center to hub, hub to hub and/or hub to customer designated premises serving wire center.

RECEIVED
MAR - 3 1997
ALASKA PUBLIC UTILITIES COMM.

ACCESS SERVICES

7. Special Access Service (Cont'd)
   7.2 Rate Regulations (Cont'd)
      7.2.4 Mileage Measurement (Cont'd)

However, when any service is routed through a hub for purposes other than customer specified bridging or multiplexing (e.g., the Company chooses to so route for test access purposes), rates will be applied only to the distance calculated between the serving wire centers associated with the customer designated premises.

See the service configuration example for multipoint service as set forth in 7.1.3(B) preceding.

7.2.5 Facility Hubs

A customer has the option of ordering Voice Grade service or High Capacity services (i.e., DS1, DS1C, DS2, DS3 or DS4) to a facility hub for channelizing to individual services requiring lower capacity facilities.

Different locations may be designated as hubs for different facility capacities, e.g., multiplexing from digital to digital may occur at one location while multiplexing from digital to analog may occur at a different location. When placing an Access Order the customer will specify the desired hub. NATIONAL EXCHANGE CARRIER ASSOCIATION, INC., TARIFF FCC No. 4 identifies serving wire centers, hub locations and the type of multiplexing functions available.

Some of the types of multiplexing available include the following:
- from higher to lower bit rate
- from higher to lower bandwidth
- from high capacity to voice frequency channels.

Point to point services may be provided on channels of these services to a hub. The transmission performance for the point to point service provided between customer designated premises will be that of the lower capacity or bit rate. For example, when a 1.544 Mbps channel is multiplexed to voice frequency channels, the transmission performance of the channelized services will be Voice Grade, not High Capacity.

RECEIVED
FEB 21 2007
STATE OF ALASKA
REGULATORY COMMISSION OF ALASKA

GCI COMMUNICATION CORP.

ACCESS SERVICES

7. Special Access Service (Cont'd)
   7.2 Rate Regulations (Cont'd)
      7.2.5 Facility Hubs (Cont'd)

The Company will commence billing and monthly rate for the service to the hub on the date specified by the customer on the Access Order. Individual channels utilizing these services may be installed coincident with the installation of the service to the hub or may be ordered and/or installed at a later date, at the option of the customer. The customer will be billed for a Voice Grade or a High Capacity Channel Termination, Channel Mileage (when applicable), and the multiplexer at the time the service is installed. Individual service rates (by service type) will apply for a Channel Termination and additional Channel Mileage (as required) for each channelized service. These will be billed to the customer as each individual service is installed.

Cascading multiplexing occurs when a High Capacity service is de-multiplexed to provide channels with a lesser capacity and one of the lesser capacity channels is further de-multiplexed. For example, a 6.312 Mbps High Capacity service is de-multiplexed to four DS1 channels and then one of the DS1 channels is further de-multiplexed to 24 individual Voice Grade channels.

When cascading multiplexing is performed, whether in the same or a different hub, a charge for the additional multiplexing unit also applies. When cascading multiplexing is performed at different hubbing locations, Channel Mileage charges also apply between the hubs.

The Company will designate hubs for program Audio and Video Services. Full-time or part-time service may be provided between customer designated premises or between a customer designated premises and a hub and billed accordingly at the monthly rates set forth in the various Rate Sections (as defined in Section 2.6) for a Channel Termination, Channel Mileage and Optional Features and Functions, as applicable. When the service is ordered to a hub, the customer may order a full-time or part-time Video and Program Audio services as needed between that hub and additional customer designated premises. The rate elements required to provide the part-time service (i.e., Channel Termination, Channel Mileage and Optional Features and Functions, as applicable) will be billed at daily rates for the duration of the service requested. (C)

RECEIVED
MAR - 3 1997
ALASKA PUBLIC UTILITIES COMM.

ACCESS SERVICES

7. Special Access Service (Cont'd)
   7.2 Rate Regulations (Cont'd)

   7.2.6 Mixed Use Analog and Digital High Capacity Services

Mixed use refers to a rate application applicable only when the customer designated premises and a Company hub where the Company performs multiplexing/ demultiplexing functions and the same customer then orders the derived channels as Special and Switched Access Services. The High Capacity facility will be ordered, provided and rated as Special Access Service (i.e., Channel Termination, Channel Mileage, as appropriate, and Multiplexing Arrangement). The nonrecurring charge that applies when the mixed use facility is installed will be the nonrecurring charge associated with the appropriate Special

Access High Capacity Channel Termination. Rating as Special Access will continue until such time as the customer chooses to use a portion of the available capacity for Switched Access Service. Individual service (i.e., Switched or Special Access) nonrecurring charges will not apply to the individual channels of the mixed use facility.

When Special Access Service is provided utilizing a channel of the mixed use facility to a hub, High Capacity rates and charges will apply for the facility to the hub, as set forth preceding, and individual service rates and charges will apply from the hub to the customer designated premises. The rates and charges that will apply to the portion from the hub to the customer designated premises will be dependent on the specific type of Special Access Service that is provided (e.g., Voice Grade, etc.). The applicable rates and charges will include a Channel Termination and Channel Mileage, if applicable. Rates and charges for optional features and functions associated with the service, if any, will apply for the appropriate channel type.

As each individual channel is activated for Switched Access Service, the High Capacity Special Access Channel Termination and Channel Mileage rates will be reduced accordingly (e.g., 1/24th for a DS1 service, etc.). Switched Access Service rates and charges will apply for each channel of the standard use facility that is used to provide a Switched Access Service. The customer must place an order for each individual Switched or Special Access Service utilizing the Mixed Use Facilities and specify the channel assignment for each such service.

RECEIVED
MAR -3 1997
ALASKA PUBLIC UTILITIES COMM.

ACCESS SERVICES

7. Special Access Service (Cont'd)

7.3 Surcharge for Special Access Service

7.3.1 General

Special access services provided under this tariff may be subject to the monthly Special Access Surcharge.

7.3.2 Application

(A) The Special Access Service that terminates on an end user's PBX or other device, where through a function of the device, the Special Access Service interconnects to the local exchange network. Interconnection functions include, but are not limited to, wiring and software functions, bridging, switching or patching of calls or stations. The Surcharge will apply irrespective of whether the interconnection function is performed in equipment located at the customer's premises or in a Centrex CO-type switch.

(B) Special Access Service will be exempted from the Surcharge by the Company upon receipt of the customer's written certification for the following Special Access Service terminations:

(1) an open-end termination in a Company switch of an FX line, including CCSA and CCSA-equivalent ONALs; or
(2) a termination used for TELEX service; or
(3) a termination that by the nature of its operating characteristics could not make use of Company common lines such as, terminations which are restricted through hardware or software; or
(4) a termination that interconnects either directly or indirectly to the local exchange network where the usage is subject to Carrier Common Line charges such as, where the Special Access Service accesses only FGA and no local exchange lines, or Special Access Service between customer points of termination; or
(5) a termination that the customer certifies to the Company is not connected to a PBX or other device which interconnects the Special Access Service to a local exchange subscriber line.

RECEIVED
JUN 17 2011
STATE OF ALASKA
REGULATORY COMMISSION OF ALASKA

GCI COMMUNICATION CORP.

ACCESS SERVICES

7. Special Access Service (Cont'd)
   7.3 Surcharge for Special Access Service (Cont'd)

7.3.3 Exemption of Special Access Service Surcharge

(A) Special Access Services which are terminated as set forth in 7.3.2B preceding will be exempted from the Special Access Surcharge if the customer provides the Company with written exemption certification. The certification may be provided to the Company as follows:

- at the time the Special Access Service is ordered or installed;
- at such time as the service is reterminated to a device which does not interconnect the service to local exchange facilities; or
- at such time as the service becomes associated with a Switched Access Service (c)

(B) The exemption certification is to be provided by the customer ordering the service. The certification must be signed by the customer or authorized representative and include the category of exemption, as set forth in 7.3.2B preceding, for each termination, and the date which the exemption is effective.

(C) The customer shall also notify the Company when an exempted Special Access Service is changed or reterminated such that the exemption is no longer applicable.

(D) The Company will work cooperatively with the customer to resolve any questions regarding the exemption certification. In addition, the Company may withhold exemption of the service until the questions are resolved.

7.3.4 Rate Regulations

(A) The surcharge will apply as set forth in 7.3.2(A) preceding, except that a surcharge will be assessed on a per voice grade equivalent basis for Special Access Services derived from High Capacity Special Access Services as illustrated in the following example:

RECEIVED
MAR - 3 1997
ALASKA PUBLIC UTILITIES COMM.

GCI COMMUNICATION CORP.

ACCESS SERVICES

7. Special Access Service (Cont'd)
   7.3 Surcharge for Special Access Service (Cont'd)
      7.3.4 Rate Regulations (Cont'd)
         (A) (Cont'd)

Special Access Service	Voice Grade Equivalent		Surcharge	Monthly Charge
DS1	24	X	$25	= $600.00

The preceding example illustrates the maximum number of surcharges applicable to a DS1. If the customer claims exemption(s) as set forth in 7.3.3 preceding or, is not utilizing all available voice grade equivalents and has spare capacity, the number of surcharges would be reduced accordingly.

In the case of multipoint Special Access Services, one Special Access Surcharge will apply for each termination of a Special Access Channel at an end user's premises.

(B) The Company will bill the appropriate Special Access Surcharge to the ordering customer for each intrastate Special Access Service installed unless exemption certification is provided as set forth in 7.3.3 preceding.

(C) If a written certification is not received at the time the Special Access Service is obtained, the Surcharge will be applied. Exempt status will become effective on the certification date indicated by the customer, subject to the regulations set forth in D following.

(D) Crediting the Surcharge: The Company will cease billing the Special Access Surcharge when certification, as set forth in 7.3.3 preceding, is received. If the status of the Special Access Service was changed prior to receipt of the exemption certification, the Company will credit the customer's account, not to exceed 90 days, based on the effective date of the change as specified by the customer in the letter of certification.

RECEIVED
MAR - 3 1997
ALASKA PUBLIC UTILITIES COMM.

ACCESS SERVICES

7. Special Access Service (Cont'd)

7.4 Voice Grade Service

7.4.1 Basic Channel Description

A Voice Grade channel is a channel which provides voice frequency transmission capability in the nominal frequency range of 300 to 3000 Hz and may be terminated two-wire or four-wire. Voice Grade channels are provided between customer designated premises, between a customer designated premises and a Company hub or hubs, or between a customer designated premises and a WATS Serving Office (WSO).

Voice Grade Special Access services are typically used for voice and voiceband data applications. Typical examples of voice grade circuits are Foreign Exchange lines (station end only), multipoint private line, voice trunk type, two-point voice grade data (one-way or simultaneous two-way), multipoint voice grade data, and voice grade telephoto or facsimile. These examples of applications are not intended to limit a customer's use of the channel nor to imply that the channel is limited to a particular use.

Rates and charges for Special Access Voice Grade Service are as set forth in Exchange Carrier Rate Sheets for Intrastate Special Access Service.

7.4.2 Technical Specifications Packages and Network Channel Interfaces

Technical Specifications Packages are set forth in 11.2.1 following. Compatible network channel interfaces are set forth in 11.2.2 following.

RECEIVED
MAY 23 1997
ALASKA PUBLIC UTILITIES COMM.

ACCESS SERVICES

7. Special Access Service (Cont'd)
   7.4 Voice Grade Service (Cont'd)

   7.4.3 Chargeable Optional Features and Functions

   (A) Central Office Bridging Capability

   (1) Voice Bridging (two-wire and four-wire)
   (2) Data Bridging (two-wire and four-wire)
   (3) Telephoto Bridging (Two-wire and four-wire)
   (4) Telemetry and Alarm Bridging, Split Band, Active Bridging, Passive Bridging, Summation, Active Bridging

   (B) Conditioning: Conditioning provides more specific transmission characteristics for Voice Grade services.

   For two point services, the parameters apply to each service as measured end-to-end. For multipoint services, the parameters apply as measured on each mid-link or as measured on each end link. C-Type conditioning and Data Capability may be combined on the same service.

   (1) C-Type Conditioning: C-Type Conditioning is provided for the additional control of attenuation distortion and envelope delay distortion on data services. The attenuation distortion and envelope delay distortion specifications for C-Type Conditioning are delineated in Technical Reference TR-NPL-000335.

   (2) Improved Attenuation Distortion*: Improved Attenuation Distortion upgrades the frequency versus loss limits of the channel. The technical specifications for Improved Attenuation Distortion are delineated in Technical Reference TR-NPL-000335. This option is available only when ordered in combination with C-Type Conditioning.

* Improved Attenuation Distortion and Improved Envelope Delay Distortion will continue to be provided to all customers who were provided with either or both of these optional features in conjunction with C-Type Conditioning prior to May 4, 1988.

RECEIVED
MAR - 3 1997
ALASKA PUBLIC UTILITIES COMM.

GCI COMMUNICATION CORP.

ACCESS SERVICES

7. Special Access Service (Cont'd)
   7.4 Voice Grade Service (Cont'd)
      7.4.3 Chargeable Optional Features and Functions (Cont'd)
         (B) Conditioning (Cont'd)

(3) Improved Envelope Delay Distortion*: Improved Envelope Delay Distortion upgrades the frequency versus delay response limits of the channel. The technical specifications for Improved Envelope Delay Distortion are delineated in Technical Reference TR-NPL-000335. This option is available only when ordered in combination with C-Type Conditioning.

(4) Data Capability (D Conditioning): Data Capability provides transmission characteristics suitable for data communications. Specifically, Data Capability provides for the control of Signal to C-Notched Noise Ratio and intermodulation distortion. It is available for two-point services or three-point multipoint services. The Signal to C-Notched Noise Ratio and intermodulation distortion parameter for Data. Capability are delineated in Technical Reference TR-NPL-000335. The rate for this option is set forth in Exchange Carrier rates following. When a service equipped with Data Capability is used for voice communications, the quality of the voice transmission may not be satisfactory.

(5) Telephoto Capability: Telephoto Capability provides transmission characteristics suitable for telephotographic communications. Specifically, Telephoto Capability is provided for the control of attenuation distortion and envelope delay distortion parameters for Telephoto Capability are delineated in Technical Reference TR-NPL-000335. The rate for this option is set forth in Exchange Carrier rates following.

(6) Sealing Current Conditioning: Sealing Current Conditioning is provided to help maintain continuity on dry metallic loops. It is usually associated with four-wire DA or NO type network channel interfaces.

* Improved Attenuation Distortion and Improved Envelope Delay Distortion will continue to be provided to all customers who were provided with either or both of these optional features in conjunction with C-Type Conditioning prior to May 4, 1988.

RECEIVED
FEB 21 2007
STATE OF ALASKA
REGULATORY COMMISSION OF ALASKA

GCI COMMUNICATION CORP.

ACCESS SERVICES

7. Special Access Service (Cont'd)
   7.4 Voice Grade Service (Cont'd)
      7.4.3 Chargeable Optional Features and Functions (Cont'd)

(C) Customer Specified Premises Receive Level: This option allows the customer to specify the receive level at the Point of Termination. The level must be within a specific range on effective four-wire transmission. The ranges are delineated in Technical Reference TR-NPL-000335. The rate for this option will be provided on an ICB basis.

(D) Improved Return Loss

(1) On effective Four-Wire Transmission at Four-Wire Point of Termination applicable to each two-wire port): Provides for a fixed 600 ohm impedance, variable level range and simplex reversal. Company equipment is required at the premises where this option is ordered. The Improved Return Loss parameters are delineated in Technical Reference TR-NPL-000335. The rate for this option is set forth in the various Rate Sections (as defined in Section 2.6). (C)

(2) On effective Two-Wire Transmission at Two-Wire Point of Termination: Provides for more stringent Echo Control specifications. In order for this option to be applicable, the transmission path must be four-wire at one POT and two-wire at the other POT. Placement of Company equipment may be required at the customer's premises with the two-wire POT. The Improved Return Loss parameters are delineated in Technical Reference TR-NPL-000335. The rate for this option is set forth in the various Rate Sections (as defined in Section 2.6). (C)

(E) Signaling Capability: Signaling Capability provides for the ability to transmit signals from one customer premises to another customer premises on the same service. The rate for this option is set forth in the various Rate Sections (as defined in Section 2.6). (C) (C)

The following network channel interfaces for Voice Grade service do not require signaling capability: AH, DA, DB, DD, DE, DS, NO, PR and TF. The following network channel interfaces for Voice Grade service require signaling capability: AB, AC, CT, DX, DY, EA, EB, EC, EX, GO, GS, LA, LB, LC, LO, LR, LS, RV and SF.

RECEIVED
FEB 21 2007
STATE OF ALASKA
REGULATORY COMMISSION OF ALASKA

GCI COMMUNICATION CORP.

ACCESS SERVICES

7. Special Access Service (Cont'd)
   7.4 Voice Grade Service (Cont'd)
      7.4.3 Chargeable Optional Features and Functions (Cont'd)

(F) Selective Signaling Arrangement: An arrangement that permits code selective ringing for up to ten codes on a multipoint service. The rate for this option is set forth in the various Rate Sections (as defined in Section 2.6). (C)

(G) Public Packet Switching Network (PPSN) Interface Arrangement: An arrangement that provides the interface requirements that permit a Voice Grade service to interface with a Public Packet Switching Network packet switch located in a Company premises. The interface is compatible with X.25 and X.75 packet switching protocols as defined by the CCITT. This option is provided on an Individual Case Basis.

(H) Four-Wire/Two-Wire Conversions: When a customer requests that an effective four-wire channel be terminated with a two-wire channel interface at the customer designated premises, a four-wire to two-wire conversion is required. The customer will be charged the four-wire Channel Termination rate as set forth in the various Rate Sections (as defined in Section 2.6) when an effective four-wire is specified in the order for service. The rate for the conversion is included as part of the basic four-wire Channel Termination rate. (C)

(I) Improved Two-Wire Voice Transmission

(1) Loss Deviation

The maximum Loss Deviation of the 1004 Hz loss relative to the Expected Measured Loss (EML) is -4.0 dB to +4.0 dB.

(2) Attenuation Distortion

The maximum Attenuation Distortion in the 404 to 280 Hz frequency band relative to loss at 1004 Hz is -2.0 dB to +6.0 dB.

RECEIVED
MAR - 3 1997
ALASKA PUBLIC UTILITIES COMM.

ACCESS SERVICES

7. Special Access Service (Cont'd)
   7.4 Voice Grade Service (Cont'd)
      7.4.3 Chargeable Optional Features and Functions (Cont'd)
         (I) Improved Two-Wire Voice Transmission (Cont'd)

(3) C-Message Noise: The maximum C-Message Noise for the transmission path at the route miles listed is less than:

Route Miles	C-Message Noise
Less than 50	35 dBrnco
51 to 100	37 dBrnco
101 to 200	40 dBrnco
201 to 400	43 dBrnco
401 to 1000	45 dBrnco

(4) Return Loss: The Return Loss, expressed as Echo Return Loss (ERL) and Singing Return Loss (SRL), is equal to or greater than:

ERL	13.0 dB
SRL	6.0 dB

The rate for the provision of Improved Two-Wire Voice Transmission is included as part of the basic Channel Termination rate.

7.5 Program Audio Service (Closed Circuit)

7.5.1 Basic Channel Description

A Program Audio channel is a channel with bandwidth measured in Hz for the transmission of a complex signal voltage. The actual bandwidth is a function of the channel interface selected by the customer. Only one-way transmission is provided. Program Audio channels are provided between customer designated premises or between customer designated premises and a Company hub or hubs. Intrastate Program Audio Service is for closed circuit application only. Rates and charges for Special Access Program Audio Service are on an individual case basis.

RECEIVED
MAR - 3 1997
ALASKA PUBLIC UTILITIES COMM.

ACCESS SERVICES

7. Special Access Service (Cont'd)
   7.5 Program Audio Service (Closed Circuit) (Cont'd)

7.5.2 Technical Specifications Packages and Network Channel Interfaces

Technical Specifications Packages are set forth in 11.2.1(D) following. Compatible network channel interfaces are set forth in 11.2.2(C)(4) following.

7.5.3 Optional Features and Functions

(A) Central Office Bridging Capability Distribution Amplifier

(B) Gain Conditioning

Control of 1004 Hz AML at initiation of service to 0 Db +0.5 dB.

(C) Stereo: Provision of a pair of gain/phase equalized channels for stereo applications. (An additional Program Audio channel must be ordered separately.)

The table set forth in 11.2.1(D) following shows the technical specifications packages with which the optional features and functions are available.

7.6 Video Service (Closed Circuit)

7.6.1 Basic Channel Description

A Closed Circuit Video channel is a channel with one-way transmission capability for a standard 525 line/60 field monochrome, or National Television Systems Committee color, video signal and one or two associated 5 or 15 kHz audio signal(s). The associated audio signal(s) may be either diplexed or provided as one or two separate channels. The provision and the bandwidth of the associated audio signal(s) is a function of the channel interface selected by the customer. Video channels are provided between customer designated premises or between a customer designated premises and a Company hub or hubs. Rates and charges for Special Access Video Service are on an individual case basis.

RECEIVED
MAR - 3 1997
ALASKA PUBLIC UTILITIES COMM.

ACCESS SERVICES

7. Special Access Service (Cont'd)
   7.6 Video Service (Closed Circuit) (Cont'd)

   7.6.2 Technical Specifications Packages and Network Channel Interfaces

   Technical Specifications Packages are set forth in 11.2.1(E) following. Compatible network channel interfaces are set forth in 11.2.2(C)(3) following.

   The following network channel interfaces (NCIs) define the bandwidth and the provision of the audio signal(s) associated with a Video channel:

NCI	Audio Bandwidth	Provision
2TV6-1	15kHz	1 Channel, diplexed
2TV6-2	15kHz	2 Channels, diplexed
2TV7-1	15kHz	1 Channel, diplexed
2TV7-2	15kHz	2 Channels, diplexed
4TV6-5	5kHz	1 Channel, separate
4TV6-15	15kHz	1 Channel, separate
4TV7-5	5kHz	1 Channel, separate
4TV7-15	15kHz	1 Channel, separate
6TV6-5	5kHz	2 Channels, separate
6TV6-15	15kHz	2 Channels, separate
6TV7-5	5kHz	2 Channels, separate
6TV7-15	15kHz	2 Channels, separate

   7.7 Digital Data Service

   7.7.1 Basic Channel Description

   A Digital Data channel is a channel for duplex four-wire transmission of synchronous serial data at the rate of 2.4, 4.8, 9.6, 19.2, 56.0, or 64.0* kbps. The actual bit rate is a function of the channel interface selected by the customer. The channel provides a synchronous service with timing provided by the Company through the Company's

*When 64.0 Kbps service is multiplexed on a DS1 High Capacity service, the DS1 must be equipped to provide Clear Channel Capability.

RECEIVED
FEB 21 2007
STATE OF ALASKA
REGULATORY COMMISSION OF ALASKA

GCI COMMUNICATION CORP.

ACCESS SERVICES

7. Special Access Service (Cont'd)
   7.7 Digital Data Service (Cont'd)
      7.7.1 Basic Channel Description (Cont'd)

facilities to the customer in the received bit stream. Digital Data channels are provided as either hubbed or non-hubbed services between customer designated premises or between a customer designated premises and a Company hub or hubs.

The customer may provide the Channel Service Unit-type equipment or other Network Channel Terminating Equipment associated with the Digital Data channel at the customer premises.

The Company will provide a channel capable of meeting a monthly average performance equal to or greater than 99.875% error-free seconds (if provided through a Digital Data hub) while the channel is in service, if it is measured through a CSU equivalent which is designed, manufactured, and maintained to conform with the specifications contained in Technical Reference GR-342-CORE.

Rates and charges for the Special Access Digital Data Service are as set forth in the various Rate Sections (as defined in Section 2.6). (C) (C)

7.7.2 Technical Specifications Packages and Network Channel Interfaces

Technical Specifications Packages are set forth in section 11 following. Compatible channel interfaces are set forth in section 11 following.

The following network channel interfaces (NCIs) define the bit rates that are available for a Digital Data channel:

NCI	Bit Rate
DU-24	2.4 Kbps
DU-48	4.8 Kbps
DU-96	9.6 Kbps
DU-19	19.2 Kbps
DU-56	56.0 Kbps
DU-64	64.0 Kbps

Pursuant to: U-06-136(3)

Effective: February 16, 2007

Issued by: GCI Communication Corp.

By: Jennifer K.G. Robertson

Title: Tariffs & Licenses Manager

RECEIVED
MAR -3 1997
ALASKA PUBLIC UTILITIES COMM.

ACCESS SERVICES

7. Special Access Service (Cont'd)
   7.7 Digital Data Service (Cont'd)

7.7.3 Chargeable Optional Features and Functions

The Optional Features and Functions described in (A), (B) and (C) following are only available where Digital Data Service is provided via a hub.

(A) Central Office Bridging Capability: Bridging is not available on a 64.0 Kbps channel.

(B) Transfer Arrangement: An arrangement that affords the customer an additional measure of protection and/or flexibility in the use of their access channel(s) on a lxN basis. The arrangement can be -utilized to transfer a leg of a Special Access Service to either a spare or working channel that terminates in either the same or a different customer designated premises. This arrangement is only available at a Company designated hub. A key activated or dial-up control service is required to operate the transfer arrangement. A spare channel, if required, is not included as a part of the option.

(C) Public Packet Switching Network (PPSN) Interface Arrangement: An arrangement that provides the interface requirements that permit a Digital Data Service to interface with a Public Packet Switching Network packet switch located in a Company premises. The interface is compatible with X.25 and X.15 packet switching protocols as defined by the CCITT.

The table set forth in 11.2.1 following shows the technical specifications packages with which the optional features and functions are available

RECEIVED
MAR - 3 1997
ALASKA PUBLIC UTILITIES COMM.

ACCESS SERVICES

7. Special Access Service (Cont'd)

7.8 High Capacity Service

7.8.1 Basic Channel Description

A High Capacity channel is a channel for the transmission of nominal 64.0 Kbps* or 1.544, 3.152, 6.132, 44.736, or 274.176 Mbps isochronous serial data. The actual bit rate is a function of the channel interface selected by the customer. High Capacity channels are provided between customer designated premises or between a customer designated premises and a Company hub or hubs. The customer will provide the Network Channel Terminating Equipment associated with the High Capacity channel at the customer s premises. A channel with technical specifications package HC1 will be capable of an error-free second performance of 98.75% over a continuous 24 hour period as measured at the 1.544 Mbps rate through a CSU equivalent which is designed, manufactured, and maintained to conform with the specifications contained in Technical Reference PUB 62411.

Rates and charges for Special Access High Capacity Service-are as set forth in Exchange Carrier Rate Sheets for Intrastate Special Access Services.

7.8.2 Technical Specification I s Packages and Network Channel Interfaces

Technical Specifications Packages are set forth in 11.1 following. Compatible channel interfaces are set forth in 11.2 following. The following network channel interfaces (NCIs) define the bit rates that are available for a High Capacity channel:

NCI	Bit Rate
DS-15	1.544 Mbps (DS1)
DS-27	274.176 Mbps (DS4)
DS-31	3.152 Mbps (DS1C)
DS-44	44.736 Mbps (DS3)
DS-63	6.312 Mbps (DS2)

*Available only as a channel of a 1.544 Mbps facility to a Company Digital Data hub or as a cross connect of two 2.4 4.8, 9.6, 56.0 or 64.0 Kbps channels of two 1.544 Mbps facilities to a Digital Data hub(s). The customer must provide system and channel assignment data.

RECEIVED
MAR - 3 1997
ALASKA PUBLIC UTILITIES COMM.

ACCESS SERVICES

7. Special Access Service (Cont'd)
   7.8 High Capacity Service (Cont'd)

7.8.3 Chargeable Optional Features and Functions

(A) Automatic Loop Transfer: The Automatic Loop Transfer provides protection on A lxN basis against failure of the facilities between a customer designated premises and the wire center serving that premises. Protection is furnished through the use of a switching arrangement t at automatically switches to a spare channel line when a working line fails. The spare channel is not included as a part of the option. This option requires compatible equipment at both the serving wire center and the customer designated premises. The customer is responsible for providing the equipment at its designated premises.

(B) Transfer Arrangement: An arrangement that affords the customer I an additional measure of flexibility in the use of their access channel(s). The arrangement can be utilized to transfer a leg of a Special Access Service to either a spare or working channel that terminates in either the same or a different customer designated premises. A key activated or dial-up control service is required to operate the transfer arrangement. A spare channel, if required, is not included as part of the option.

(C) Central Off ice Multiplexing

(1) DS4 to DS1: An arrangement that converts a 274.176 Mbps channel to 168 DS1 channels using digital time division multiplexing.

(2) DS3 to DS1: An arrangement that converts a 44.736 Mbps channel to 28 DS1 channels using digital time division multiplexing.

(3) DS2 to DS1: An arrangement that converts a 6.312 Mbps channel to four DS1 channels using digital time division multiplexing.

(4) DS1C to DS1: An arrangement that converts a 3.152 Mbps channel to two DS1 channels using digital time division multiplexing.

RECEIVED
MAR - 3 1997
ALASKA PUBLIC UTILITIES COMM.

ACCESS SERVICES

7. Special Access Service (Cont'd)
   7.8 High Capacity Service (Cont'd)
      7.8.3 Chargeable Optional Features and Functions (Cont'd)
         (C) Central Office Multiplexing (Cont'd)

(5) DS1 to Voice: An arrangement that converts a 1.544 Mbps channel to 24 channels for use with Voice Grade Services. A channel(s) of this DS1 to the Hub can also be used for a Digital Data Service.

(6) DS1 to DS0: An arrangement that converts a 1.544 Mbps channel to 23 64.0 Kbps channels utilizing digital time division multiplexing.

(7) DS0 to Subrate: An arrangement that converts a 64.0 Kbps channel to subspeeds of up to twenty 2.4 Kbps, ten 4.8 Kbps, or five 9.6 Kbps channels using digital time division multiplexing.

The table set forth in 11.1 following shows the technical specifications packages with which the optional features and functions are available.

7.9 Individual Case Filings

Certain services set forth in Special Access Service, Section 7, are provided on an individual case basis.

RECEIVED
MAR -3 1997
ALASKA PUBLIC UTILITIES COMM.

GCI COMMUNICATION CORP.

ACCESS SERVICES

8. Special Facilities and Special Services

8.1 Description

The services provided under this tariff are provided over such routes and facilities as the Company may elect. Special Facilities Routing is involved when, in order to comply with requirements specified by the customer, the Company provides Switched Access Service or Special Access Service in a manner which includes one or more of the following conditions.

8.1.1 Diversity

Two or more circuits must be provided over not more than two different physical routes.

8.1.2 Avoidance

A circuit(s) must be provided on a route which avoids specified geographical locations.

8.1.3 Diversity and Avoidance Combined

8.1.4 Cable-Only Facilities

Certain Voice Grade services are provided on Cable-Only Facilities to meet the particular needs of a customer.

Service is provided subject to the availability of Cable-Only facilities. In the event of service failure, restoration will be made through the use of any available facilities as selected by the Company

Avoidance and Diversity are available on Switched Access Service as set forth in Section 6 preceding; Metallic, Telegraph Grade and Voice Grade Special Access Services asset forth respectively in 7.4, 7.5, and 7.6 preceding. Cable-Only Facilities are available for Switched Access Service as set forth in Section 6 preceding and Voice Grade Special Access Services as set forth in 7.6 preceding on an Individual Case Basis.

RECEIVED
FEB 21 2007
STATE OF ALASKA
REGULATORY COMMISSION OF ALASKA

GCI COMMUNICATION CORP.

ACCESS SERVICES

8. Special Facilities and Special Services (Cont'd)
   8.1 Description (Cont'd)

In order to avoid the compromise of special routing information, the Company will provide the required routing information for each specially routed service to only the ordering customer. If requested by customer, this information will be provided when service is installed and prior to any subsequent changes in routing.

The rates and charges for Special Facilities Routing of Access Services are developed on an individual case basis. Such rates and charges for Special Facilities Routing of Access Services are as set forth in the various Rate Sections (as defined in Section 2.6) and are in addition to all other rates and charges that may be applicable for services provided under other sections of this tariff. (C)

8.2 Specialized Service or Arrangements

Specialized Service or Arrangements may be provided by the Company, at the request of a customer, on an individual case basis if such service or arrangements meet the following criteria:

- The requested service or arrangements are not offered under other sections of this tariff.
- The facilities utilized to provide the requested service or arrangements are of a type normally used by the Company in furnishing its other services.
- The requested service or arrangements are compatible with other Company services, facilities, and its engineering and maintenance practices.
- This offering is subject to the availability of the necessary Company personnel and capital resources.

Rates and charges and additional regulations if applicable, for Specialized Service or Arrangements are provided on an individual case basis and are as set forth in the various Rate Sections (as defined in Section 2.6). (C) (C)

RECEIVED
MAR - 3 1997
ALASKA PUBLIC UTILITIES COMM.

ACCESS SERVICES

9. Additional Engineering, Additional Labor and Miscellaneous Services

In this section, normally scheduled working hours are an employee's scheduled work period on any given business day which totals eight (8) hours. Any additional engineering, additional labor and/or miscellaneous services requested by the customer will be billed on a time and material basis by the Company.

9.1 Additional Engineering

Additional Engineering will be provided by the Company at the request of the customer when:

9.1.1 A customer requests additional technical information after the Company has already provided the technical information normally included on the Design Layout Report (DLR) as set forth in 6.6.7 and 7.1.5 preceding.

9.1.2 Additional engineering time is incurred by the Company to engineer a customer's request for a customized service as set forth in 7.1.2 preceding or for Telecommunication Priority Service Set forth in 9.3.3.

The Company will notify the customer that additional engineering charges will apply before any additional engineering is undertaken.

9.2 Additional Labor

Additional labor is that labor requested by the customer on a given service and agreed to by the Company. The Company will notify the customer that additional labor charges will apply before any additional labor is undertaken. Additional labor charges apply to the services described in Sections 9.2.1 through 9.2.6.

9.2.1 Overtime Installation

Overtime installation is that Company installation effort outside of normally scheduled working hours.

RECEIVED
MAR -3 1997
ALASKA PUBLIC UTILITIES COMM.

ACCESS SERVICES

9. Additional Engineering, Additional Labor and Miscellaneous Services (Cont'd)
   9.2 Additional Labor (Cont'd)

9.2.2 Overtime Repair

Overtime repair is that Company maintenance effort performed outside of normally scheduled working hours.

9.2.3 Stand by

Stand by includes all time in excess of one-half (1/2) hour during which Company personnel stand by to make installation acceptance tests or cooperative tests with a customer.

9.2.4 Testing and Maintenance with Other Telephone Companies

Additional labor charges apply for additional testing, maintenance or repair of facilities which connect to facilities of other telephone companies. This is in additional to the normal effort required to test, maintain or repair facilities provided solely by the Company.

9.2.5 Testing Services

Testing Services other than those described in other parts of this tariff will be provided on a time and material basis, if requested by the customer. Testing will be provided subject to the availability of equipment and qualified personnel.

9.2.6 Other Labor

Other labor is that additional labor incurred to accommodate a specific customer request that involves labor which is not covered by any other section of this tariff. It also covers additional labor necessary to meet customer requests as described in Section 5. Other Labor includes, but is not limited to, the provisioning to the customer, additional or duplicate reports or documents previously provided to the customer. Charges will be developed on a time and material basis.

RECEIVED
MAR -3 1997
ALASKA PUBLIC UTILITIES COMM.

ACCESS SERVICES

9. Additional Engineering, Additional Labor and Miscellaneous Services (Cont'd)

9.3 Miscellaneous Services

9.3.1 Testing Services

Testing Services offered under this section of the tariff are optional and will be billed to the customer on a time and material basis by the Company. Other testing services, as described in 6.6.8 preceding, are provided by the Company in association with Access Services and are furnished at no additional charge.

Testing Services are normally provided by Company personnel at Company locations. However, provisions are made in (B)(2) following for a customer to request Company personnel to perform testing services at the customer designated premises.

The offering of Testing Services under this section of the tariff is made subject to the availability of the necessary qualified personnel and test equipment at the various test locations mentioned in (A) and (B) following.

(A) Switched Access Service: Testing Services for Switched Access are comprised of (a) tests which are performed during the installation of a Switched Access Service, i.e. Acceptance Tests, (b) tests which are performed after customer acceptance of such access services and which are without charge i.e., routine testing and (c) additional tests which are performed during or after customer acceptance of such access services and for which additional charges apply, i.e., Additional Cooperative Acceptance Tests and in-service tests.

Routine tests are those tests performed by the Company on a regular basis, as set forth in 6.6.8 preceding which are required to maintain Switched Access Service. Additional in-service tests may be done on an automatic basis (no Company or customer technicians involved), on a manual basis (Company technicians(s) involved at Company office(s) and Company or customer technicians(s) involved at the customer designated premises).

RECEIVED
MAR - 3 1997
ALASKA PUBLIC UTILITIES COMM.

ACCESS SERVICES

9. Additional Engineering, Additional Labor and Miscellaneous Services (Cont'd)
   9.3 Miscellaneous Services (Cont'd)
      9.3.1 Testing Services (Cont'd)
         (A) Switched Access Service (Cont'd)

Testing services are ordered to the Dial Tone Office for FGA, to the access tandem or end office for FGB (wherever the FGB service is ordered) and to the end office for FGs C and D. Testing Services for Directory Assistance Service not routed through an access tandem is ordered to a Directory Assistance Location for each NPA.

(1) Additional Cooperative Acceptance Testing: Additional Cooperative Acceptance Testing of Switched Access Service involves the Company provision of a technician at its office(s) and the customer provision of a technician at its premises, with suitable test equipment to perform the required tests.

Additional Cooperative Acceptance Tests may, for example, consist of the following tests: Impulse Noise, Phase Jitter, Signal to C-Notched Noise Ratio, Intermodulation (Nonlinear) Distortion, Frequency Shift (Offset), Envelope Delay Distortion, and Dial Pulse Percent Break

(2) Additional Automatic Testing: Additional Automatic Testing (AAT) of Switched Access Services (Feature Groups B, C and D), is a service where the customer provides remote office test lines and 105 test lines with associated responders or their functional equivalent. The customer may order, at additional charges, gain-slope and C-notched noise testing and may order the routine tests (1004 Hz loss, C-Message Noise and Balance) on an as needed or more than routine schedule. The Company will provide an AAT report that lists the test results for each trunk tested. Trunk test failures requiring customer participation for trouble resolution will be provided to the customer on an as-occurs basis. The Additional Tests, (i.e., gain slope, C-notched noise, 1004 Hz loss, C-message noise and balance) may be ordered by the customer at additional charges, 60 days prior to the start of the customer prescribed schedule. Additional tests will be provided on a time and material basis and billed to the customer by the Company.

RECEIVED
MAR - 3 1997
ALASKA PUBLIC UTILITIES COMM.

ACCESS SERVICES

9. Additional Engineering, Additional Labor and Miscellaneous Services (Cont'd)
   9.3 Miscellaneous Services (Cont'd)
      9.3.1 Testing Services (Cont'd)
         (A) Switched Access Service (Cont'd)

(3) Additional Manual Testing: Additional Manual Testing (AMT) of Switched Access Services (Feature Groups A, B, C and D and Directory Access Service not routed through an access tandem), is a service where the Company provided a technician at its office(s) and the Company or customer provides a technician at the customer designated premises, with suitable test equipment to perform the required tests. Such additional tests will normally consist of gain-slope and C-notched noise testing. However, the Company will conduct any additional tests which the IC may request.

The Company will provide an AMT report listing the test results for each trunk tested. Trunk test failures requiring customer participation for trouble resolution will be provided to the customer on a per occurrence basis.

The Additional Manual Tests may be ordered by the customer at additional charges, 60 days prior to the start of the testing schedule as mutually agreed to by the customer and the Company.

Additional Manual Tests will be provided on a time and material basis and billed to the customer by the Company.

(4) Obligations of the Customer:

(a) The customer shall provide the Remote Office Test Line priming data to the Company, as appropriate, to support routine testing as set forth in 6.6.8 preceding or AAT as set forth in 9.3.1 preceding.

(b) The customer shall make the facilities to be tested available to the Company at times mutually agreed upon.

RECEIVED
MAR -3 1997
ALASKA PUBLIC UTILITIES COMM.

GCI COMMUNICATION CORP.

ACCESS SERVICES

9. Additional Engineering, Additional Labor and Miscellaneous Services (Cont'd)
   9.3 Miscellaneous Services (Cont'd)
      9.3.1 Testing Services (Cont'd)

(B) Special Access Service

The Company will provide assistance in performing specific tests requested by the customer.

(1) Additional Cooperative Acceptance Testing: When a customer provides a technician at its premises or at an end user's premises, with suitable test equipment to perform the requested tests, the Company will provide a technician at its office for the purpose of conducting Additional Cooperative Acceptance Testing on Voice Grade Services. At the customer's request, the Company may provide a technician at the customer's premises or at the end user premises. These tests may, for example, consist of the following:

- Attenuation Distortion (i.e., frequency response)
- Intermodulation Distortion (i.e., harmonic distortion)
- Phase Jitter
- Impulse Noise
- Envelope Delay Distortion
- Echo Control
- Frequency Shift

(2) Additional Manual Testing: The Company will provide a technician at its premises, and the Company or customer will provide a technician at the customer's designated premises with suitable test equipment to perform the requested tests.

(3) Obligation of the Customer: When the customer subscribes to Testing Service as set forth in this section, the customer shall make the facilities to be tested available to the Company at times mutually agreed upon.

RECEIVED
MAR - 3 1997
ALASKA PUBLIC UTILITIES COMM.

ACCESS SERVICES

9. Additional Engineering, Additional Labor and Miscellaneous Services (Cont'd)
9.3 Miscellaneous Services (Cont'd)

9.3.2 Maintenance of Service

(A) When a customer reports a trouble to the Company for clearance and no trouble is found in the Company's facilities, the customer shall be responsible for payment of a Maintenance of Service charge developed on a time and material basis for the period of time from when Company personnel are dispatched, at the request of the customer, to the customer designated premises to when the work is completed. Failure of Company personnel to find trouble in Company facilities will result in no charge if the trouble is actually in those facilities, but not discovered at the time.

(B) The customer shall be responsible for payment of a Maintenance of Service charge when the Company dispatches personnel to the customer designated premises, and the trouble is in equipment or communications systems provided by other than the Company or in detariffed CPE provided by the Company.

In either (A) or (B) preceding, no credit allowance will be applicable for the interruption involved if the Maintenance of Service Charge applies.

9.3.3 Telecommunications Service Priority - TSP

(A) Priority installation and/or restoration of National Security Emergency Preparedness (NSEP) telecommunications service shall be provided in accordance with Part 64.401, Appendix A, of the Federal Communications Commission's (FCC's) Rules and Regulations.

In addition, TSP System service shall be provided in accordance with the guidelines set forth in "Telecommunications Service Priority (TSP) System for National Security Emergency Preparedness (NSEP) Service Vendor Handbook" (NCSH 3-1-2) dated July 9, 1990, and "Telecommunication Service Priority System for National Security Emergency Preparedness Service User Manual" (NCSM 3-1-1).

RECEIVED
APR 0 2 2007
STATE OF ALASKA
REGULATORY COMMISSION OF ALASKA

GCI COMMUNICATION CORP.

ACCESS SERVICES

9. Additional Engineering, Additional Labor and Miscellaneous Services (Cont'd)
   9.3 Miscellaneous Services (Cont'd)
      9.3.3 Telecommunications Service Priority - TSP (Cont'd)
         (A) (Cont'd)

The TSP System is a service, developed to meet the requirements of the Federal Government, as specified in the Service Vendor's Handbook and Service User's Manual which provides the regulatory, administrative and operational framework for the priority installation and/or restoration of NSEP telecommunications services. These include both Switched and Special Access Services. The TSP System applies only to NSEP telecommunications services, and requires and authorizes priority action by the Company providing such services. For Switched Access Service, the TSP System's applicability is limited to those services which the Company can discretely identify for priority provisioning and/or restoration.

(B) A Telecommunications Service Priority charge applies, as set forth in the (N)
Rate Sections (as defined in Section 2.6, Rate Sections), when a request to (N)
provide or change a Telecommunications Service Priority is received subsequent to the issuance of an Access Order to install the service.

A Telecommunications Service Priority charge does not apply when a Telecommunications Service Priority is discontinued or when ordered coincident with an Access Order to install or change service.

RECEIVED
APR 02 2007
STATE OF ALASKA
REGULATORY COMMISSION OF ALASKA

GCI COMMUNICATION CORP.

ACCESS SERVICES

9. Additional Engineering, Additional Labor and Miscellaneous Services (Cont'd)
   9.3 Miscellaneous Services (Cont'd)
      9.3.3 Telecommunications Service Priority - TSP (Cont'd)
         (B) (Cont'd)

A Miscellaneous Service Order Charge, as set forth in the Rate Sections (as (N)
defined in Section 2.6, Rate Sections), will apply to Telecommunications Service (N)
Priority requests that are ordered subsequent to the initial installation of the
associated access service. Time and Materials charges may be applicable when
provisioning or restoring Switched or Special Access Services with
Telecommunications Service Priority and will be billed to the Customer by the
Company, in accordance with Sections 9 and the Rate Sections (as defined in (N)
Section 2.6, Rate Sections).* (N)

A Telecommunications Service Priority monthly charge will apply as set forth in (N)
the Rate Sections (as defined in Section 2.6, Rate Sections) to monitor and (N)
maintain database accuracy. (TSP Database Charge).

* Any company specific time and materials charges for TSP access not expressly shown in this tariff will be identified by the utility prior to commencement of service. All such access rates are subject to RCA approval.

Pursuant to:
U07-052(1)

Effective: April 24, 2007

Issued by: GCI Communication Corp.

By: Jennifer K.G. Robertson

Title: Tariffs and Licenses Manager

RECEIVED

MAR 0 8 2007

STATE OF ALASKA
REGULATORY COMMISSION OF ALASKA

GCI COMMUNICATION CORP.

ACCESS SERVICES

9. Additional Engineering, Additional Labor and Miscellaneous Services (Cont'd)
   9.3 Miscellaneous Services (Cont'd)
      9.3.3 Telecommunications Service Priority - TSP (Cont'd)
         (B) (Cont'd)

When the Customer requests an audit or a reconciliation of the Company's Telecommunications Service Priority records, a Miscellaneous Service Order charge as set forth in the various Rate Sections (as defined in Section 2.6) will be applied. Additional Labor rate charges, if applicable, will be billed to the customer by the Company. (N)

Charges for Special Access Service are shown in the various Rate Sections (as defined in Section 2.6).

9.3.4 Access to Intrastate Interexchange Carriers

Local exchange carriers will provide equal access interconnection to intrastate interexchange carriers according to the procedures and schedules identified in this section. Presubscription and access rules applicable to end users are also explained in this section. Presubscription is the process by which end users may select and designate to the Company an IC to access, without an access code, for interexchange calls. Depending upon availability, the end user may presubscribe to different ICs for interstate and intrastate calls.

(A) A local exchange carrier providing service to an exchange in a location identified in 3 AAC 52.355(a)(1) shall install and maintain plant, equipment, and facilities necessary to provide 2-PIC dialing in that exchange upon receipt of a bona fide request for interconnection.

(B) If a local exchange carrier receives a bona fide request for interconnection in a location identified in 3 AAC 52.355(a) (1) in an exchange where interstate equal access is currently provided, it shall implement 2-PIC dialing in that exchange within 90 days after receipt of that request. Upon implementation of 2-PIC dialing, the access line or lines of each end user will be presubscribed to the incumbent carrier until the local exchange carrier receives authorization from the end user changing presubscription for an access line or lines to another certificated intrastate interexchange carrier.

RECEIVED

MAR - 3 1997

ALASKA PUBLIC UTILITIES COMM.

GCI COMMUNICATION CORP.

ACCESS SERVICES

9. Additional Engineering, Additional Labor and Miscellaneous Services (Cont'd)
   9.3 Miscellaneous Services (Cont'd)
      9.3.4 Access to Intrastate Interexchange Carriers (Cont'd)

(C) If a local exchange carrier desires a waiver of Part B. of this section, it must file a motion with APUC for that waiver within 30 days after receipt of the bona fide request for interconnection and include a schedule that states when 2-PIC dialing can be provided, the financial and technical basis for the waiver request, and a proposed public notice of the interim dialing arrangements. The proposed public notice must explain the 1-PIC dialing arrangements, list carriers available to provide both interstate and intrastate interexchange service, and describe the actions necessary to change a presubscribed access line to a different interstate interexchange carrier.

(D) If a waiver of Part B. of this section is granted by the APUC then the local exchange carrier shall implement 1-PIC dialing for the period prior to 2-PIC implementation in accordance with the following rules:

(1) Within 14 days after Commission approval of a waiver and associated public notice, the local exchange carrier shall mail copies of the approved notice to its end users. Each intrastate interexchange carrier listed on the notice will be billed by the local exchange carrier for an equal share of the cost of noticing.

(2) The local exchange carrier shall implement 1-PIC dialing 45 days after Commission approval of the waiver.

(3) Unless otherwise requested by the end user, upon conversion to 1-PIC, an end user's interstate carrier will automatic-ally become the end user's primary carrier processing both interstate and intrastate calls. New end users in 1-PIC areas must choose the same IC for both intrastate and interstate calls.

RECEIVED

MAR - 3 1997

ALASKA PUBLIC UTILITIES COMM.

GCI COMMUNICATION CORP.

ACCESS SERVICES

9. Additional Engineering, Additional Labor and Miscellaneous Services (Cont'd)
   9.3 Miscellaneous Services (Cont'd)
      9.3.4 Access to Intrastate Interexchange Carriers (Cont'd)

(E) If a local exchange carrier receives a bona fide request for interconnection in a location identified in 3 ACC 52.355(a) (1) but in which interstate equal access is not currently available, it shall provide 2-PIC dialing at the same time and on the same schedule as required by the Federal Communications Commission for the implementation of interstate equal access. In this event, presubscription balloting for intrastate interexchange carriers will be conducted in coordination with balloting for interstate interexchange carriers.

(1) At least 45 days in advance of the mailing of inter-state interexchange presubscription ballots, a local exchange carrier shall file with the APUC for review and approval a proposed intrastate interexchange presubscription ballot that lists the available intrastate interexchange carriers. The ballot must clearly state that an end user may select different interexchange carriers for intrastate and interstate interexchange services.

(2) Pending the conversion to 2-PIC access, 1-plus and no-plus intrastate interexchange calls must be routed to the incumbent carrier. Other intrastate interexchange carriers shall obtain access through Feature Group A or Feature Group B without discount, or through the incumbent carrier's 2-PIC equal access tandem.

(3) On the effective date of this tariff, all existing end users have access to intrastate MTS/WATS. No later than 85 days prior to conversion to Feature Group D in a serving end office, the Company will notify end users of the availability of equal access in their particular area. The notification will include the intrastate ballot identified in section 9.3.4(e)(1). This notification will be sent via U.S. Mail to each end user of record served by the end office to be converted.

RECEIVED
MAR 0 8 2007
STATE OF ALASKA
REGULATORY COMMISSION OF ALASKA

GCI COMMUNICATION CORP.

ACCESS SERVICES

9. Additional Engineering, Additional Labor and Miscellaneous Services (Cont'd)
   9.3 Miscellaneous Services (Cont'd)
      9.3.4 Access to Intrastate Interexchange Carriers (Cont'd)
         (E) (Cont'd)

(4) End users may select one of the following options at no charge:

- a primary interstate IC for all of its lines,
- a primary intrastate IC for all of its lines,
- a different interstate IC for each of its lines,
- a different intrastate IC for each of its lines.

Only one interstate or intrastate IC may be selected for each line or lines terminating in the same hunt group. End users may designate that they do not want to presubscribe to any IC. The end user must arrange this designation by directly notifying the local exchange carrier's business office. This choice will require the end user to dial an access code (10XXX) for all interstate or intrastate calls. After the end user's initial selection of a predesignated IC or the designation that they do not want to presubscribe to any IC, for any change in selection after conversion to Equal Access in the serving end office, a nonrecurring charge, as set forth in the various Rate (N)
Sections (as defined in Section 2.6) applies. (N)

(5) End users not responding to the initial notification will be sent a second notification for the selection of a predesignated IC no earlier than 40 days prior to or no later than 90 days after the conversion to Equal Access in a serving end office. This second notification will indicate the primary IC that has been assigned to them if they fail to respond to the second notification. After the allocation process has been completed, end users assigned to an IC via the allocation process may change their IC one time within six months after conversion to Equal Access in the serving end office at no charge. Following the six month period after conversion to Equal Access for any change in selection, a nonrecurring charge as set forth in the various Rate (N)
Sections (as defined in Section 2.6), applies. (N)

RECEIVED
FEB 13 2002
State of Alaska
Regulatory Commission of Alaska

GCI COMMUNICATION CORP.

ACCESS SERVICES

9. Additional Engineering, Additional Labor and Miscellaneous Services (Cont'd)
   9.3 Miscellaneous Services (Cont'd)
      9.3.4 Access to Intrastate Interexchange Carriers (Cont'd)
         (E) (Cont'd)

(6) When an end user indicates more than one IC selection on the return notification or returns an illegible return notification, the Company will contact the end user for clarification. If the end user indicates an IC selection on the return notification that does not match with information provided by an IC and both notifications indicate the same authorization date, the end user's notification takes precedence and the Company will process the end user's selection. In the event that two or more ICs provide to the Company notifications with the same authorization date and neither notification has been processed, the Company will contact the end user for clarification. A list of these customers in conflict must be sent to the affected IC by the Company.

In the event that two or more ICs have provided to the Company notifications with the same authorization date(s), and one IC notification has already been processed by the Company, those IC notifications not yet processed would be returned to the ICs. (L)

(L)

(L) Matter relocated to Original Page 170.1.

RECEIVED
MAR 0 8 2007
STATE OF ALASKA
REGULATORY COMMISSION OF ALASKA

GCI COMMUNICATION CORP.

ACCESS SERVICES

9. Additional Engineering, Additional Labor and Miscellaneous Services (Cont'd)
   9.3 Miscellaneous Services (Cont'd)
      9.3.4 Access to Intrastate Interexchange Carriers (Cont'd)

(F) New end users who are served by end offices equipped with Feature Group D will be asked to presubscribe to an IC at the time they place an order with the Company for Telephone Exchange Service. New end users in 2-PIC areas may select from the following options at no charge:

- a primary interstate IC for all of its lines,
- a primary intrastate IC for all of its lines,
- a different interstate IC for each of its lines,
- a different intrastate IC for each of its lines.

Only one interstate IC and one intrastate IC may be selected for each individual line, or lines terminating in the same hunt group. In an area where waiver of 2-PIC requirements has been granted, the provisions of Section 9.3.4(D) apply. Subsequent to the installation of Telephone Exchange Service and after the end user's initial selection of predesignated IC(s), for any change in selection, a nonrecurring charge, as set forth in the various Rate Sections (as defined in (N)
Section 2.6), applies. (N)

Pursuant to:
U07-052(1)

Effective: April 24, 2007

Issued by: GCI Communication Corp.

By: Jennifer K.G. Robertson Title: Tariffs and Licenses Manager

RECEIVED

MAR 0 8 2007

STATE OF ALASKA
REGULATORY COMMISSION OF ALASKA

GCI COMMUNICATION CORP.

ACCESS SERVICES

9. Additional Engineering, Additional Labor and Miscellaneous Services (Cont'd)
   9.3 Miscellaneous Services (Cont'd)
      9.3.4 Access to Intrastate Interexchange Carriers (Cont'd)

(G) If the new end user fails to designate the ICs as its predesignated ICs prior to the date of installation of Telephone Exchange Service, the Company will (1) allocate the end user to ICs based upon current presubscription ratios, or (2) require the end user to dial an access code (10XXX) for all intrastate calls. The end user will be notified which option will be applied if they fail to presubscribe to ICs. An allocated end user may designate another, or initial, IC as its predesignated IC one time at no charge, if it is requested within six months after the installation of Telephone Exchange Service.

For any change in selection after six months from the installation of Telephone Exchange Service, a nonrecurring charge, as set forth in the various Rate Sections (N)
(as defined in Section 2.6), applies. (N)

(H) If an IC elects to discontinue its Feature Group D Service offering prior to or within 2 years of the conversion, the IC will notify the local exchange carrier of the cancellation. The IC will also notify all end users which selected them that they are Canceling their service and that they should contact the Company to select a new primary IC. The IC will also inform the end user that it will pay the presubscription change charge. The Canceling IC will then be billed by the local exchange carrier the appropriate charge for each end user for a period of two years from the discontinuance of Feature Group D service.

(I) Customer Notice of Access Options and Presubscription

(1) For a period of three years after a local exchange telephone carrier initially provides 2-PIC dialing, it must annually include in its periodic billings or in a separate mailing a notice to end users listing available intrastate interexchange carriers and explaining the actions that must be taken to change carriers and the cost of making the change. Each intrastate interexchange carrier listed on the notice will be billed by the local exchange carrier for an equal share of the cost of noticing.

Pursuant to:
U07-052(1)

Effective: April 24, 2007

Issued by: GCI Communication Corp.

By: Jennifer K.G. Robertson Title: Tariffs and Licenses Manager

RECEIVED
MAR -3 1997
ALASKA PUBLIC UTILITIES COMM.

GCI COMMUNICATION CORP.

ACCESS SERVICES

9. Additional Engineering, Additional Labor and Miscellaneous Services (Cont'd)
   9.3 Miscellaneous Services (Cont'd)
      9.3.4 Access to Intrastate Interexchange Carriers (Cont'd)
         (I) Customer Notice of Access Options and Presubscription (Cont'd)

(2) A local exchange carrier may not reassign an end user's access line or lines to a different intrastate carrier unless either the end user has signed a written request for the change or the local exchange carrier has verifiable direct contact with the end user. A copy of the written request will suffice as a basis for reassigning an end user, so long as the LEC is immediately provided with the original written request in the event of a disputed reassignment.

9.3.5 Blocking Service

(A) 900 Blocking Service: The Company will provide 900 Blocking Service to customers who obtain intrastate Feature Group A Switched Access service under this tariff. This service is only provided at appropriately equipped end offices. Those offices providing 900 Blocking Service are identified in NATIONAL EXCHANGE CARRIERS ASSOCIATION, INC. TARIFF F.C.C. No. 4.

On each line for which 900 Blocking Service is ordered, the Company will block all direct dialed calls placed to a 900 number. When capable, the Company will route the blocked calls to a recorded message.

900 Blocking Service is provided free of charge to subscribers. However, when a subscriber requests to end the 900 Blocking Service, the Miscellaneous Service Order charge will apply. The charge does not apply when blocking is removed from a Feature Group A Switched Access line at the same time it is disconnected.

RECEIVED
MAR -3 1997
ALASKA PUBLIC UTILITIES COMM.

GCI COMMUNICATION CORP.

ACCESS SERVICES

10. Special Construction

10.1 General

This section addresses special construction of Company facilities which are used to provide services offered under this tariff.

When special construction is required as described in 10.2 following, the provisions of this section apply in addition to regulations, rates, and charges set forth in other sections of this tariff.

Charges will be computed for each specific application of Special Construction. The customer will provide written authorization to the Company prior to the commencement of any Special Construction. The computed charges for Special Construction will be based upon time and materials. The Company will notify the customer when Special Construction is required. A deposit of fifty percent (50%) of the Company estimated costs will be required before the commencement of construction. The balance will be due upon completion.

10.2 Conditions Requiring Special Construction

Special construction is required when suitable facilities are not available to meet a customer's order for service and one or more of the following conditions exist:

- The Company has no other requirement for the facilities constructed at the customer's request;
- The customer requests that service be furnished using a type of facility, or via a route, other than that which the Company would otherwise utilize in furnishing the requested service;
- The customer requests the construction of more facilities than are required to satisfy its order for service;
- The customer requests construction be expedited resulting in added cost to the Company.

RECEIVED
MAR - 3 1997
ALASKA PUBLIC UTILITIES COMM.

GCI COMMUNICATION CORP.

ACCESS SERVICES

11. Access Service Interfaces and Transmission Specifications

11.1 contains Switched Access Service Options (which are comprised of Interface Groups, Supervisory Signaling, Entry Switch Receive Level and Local Transport Termination) and Transmission Specifications. 11.2 describes Special Access Service Network Channel (NC) codes and Network Channel Interface (NC) codes.

11.1 Switched Access Service

Ten Interface Groups are provided for terminating the Transport at the customer's designated premises. Each Interface Group provides a specified premises interface (e.g., two-wire, four-wire, DS1, etc.). Where transmission facilities permit, the individual transmission path between the customer's designated premises and the first point of switching may, at the option of the customer, be provided with optional features as set forth in 11.1.1 following.

As a result of the customer's access order and type of Company transport facilities serving the customer designated premises, the need for signaling conversions or two-wire to four-wire conversions, or the need to terminate digital or high frequency facilities in channel bank equipment may require that Company equipment be placed at the customer designated premises. For example, if a voice frequency interface is ordered by the customer and the Company facilities serving the customer designated premises are digital, then Company channel bank equipment must be placed at the customer designated premises in order to provide the voice frequency ordered by the customer.

11.1.1 Transport Interface Groups

Interface Groups are combinations of technical parameters which describe the Company handoff at the point of termination at the customer designated premises. The technical specifications concerning the available interface groups are set forth in (A) through (D) following.

Interface Group 1 is provided with Type C Transmission Specifications, as set forth in 11.1.2(C) following, and Interface Groups 2 through 10 are provided with Type A or B Transmission Specifications, as set forth respectively in 11.1.2(E) and (F)

RECEIVED
MAR - 3 1997
ALASKA PUBLIC UTILITIES COMM.

ACCESS SERVICES

11. Access Service Interfaces and Transmission Specifications (Cont'd)
    11.1 Switched Access Service (Cont'd)
        11.1.1 Transport Interface Groups (Cont'd)

following, depending on the Feature Group and whether the Access Service is routed directly or through an access tandem. All Interface Groups are provided with Data Transmission Parameters.

Only certain premises interfaces are available at the customer designated premises. The premises interfaces associated with the Interface Groups may vary among Feature Groups.

(A) Interface Group 1: Interface Group 1, except as set forth in the following, provides two-wire voice frequency transmission at the point of termination at the customer designated premises. The interface is capable of transmission of voice and associated telephone signals within the frequency bandwidth of approximately 300 to 3000 Hz.

Interface Group 1 is not provided in association with FGD when the first point of switching is an access tandem. In addition, Interface Group 1 is not provided in association with FGB or FGD when the first point of switching provides only four-wire terminations.

The transmission path between the point of termination at the customer designated premises and the first point of switching may be comprised of any form or configuration of plant capable of and typically used in the telecommunications industry for the transmission of voice and associated telephone signals within the frequency bandwidth of 300 to 3000 Hz.

The interface is provided with loop supervisory signaling. When the interface is associated with FGA, such signaling will be loop start or ground start signaling. When the interface is associated with FGB or FGD, such signaling except for two-way calling which is E&M signaling, will be reverse battery signaling.

(B) Interface Group 2: Interface Group 2 provides four-wire voice frequency transmission at the point of termination at the customer designated premises. The

RECEIVED
MAR - 3 1997
ALASKA PUBLIC UTILITIES COMM.

ACCESS SERVICES

11. Access Service Interfaces and Transmission Specifications (Cont'd)
    11.1 Switched Access Service (Cont'd)
        11.1.1 Transport Interface Groups (Cont'd)
            (B) Interface Group 2 (Cont'd)

interface is capable of transmission of voice and associated telephone signals within the frequency bandwidth of approximately 300 to 3000 Hz.

The transmission path between the point of termination at the customer designate premises and the first point of switching may be comprised of any form or configuration of plant capable of and typically used in the telecommunications industry for the transmission of voice and associated telephone signals within the frequency bandwidth of approximately 300 to 3000 Hz.

The interface is provided with loop supervisory signaling. When the interface is associated with FGA, such signaling will be loop start or ground start signaling. When the interface is associated with FGB or FGD, such signaling, except for two-way calling which is E&M signaling, will be reverse battery signaling.

(C) Interface Groups 3 through 5: Interface Groups 3 through 5 provide analog transmission at the point of termination at the customer designated premises. The various interfaces are capable of transmitting electrical signals at the frequencies illustrated following, with the capability to channelize voice frequency transmission paths. Certain frequencies within the bandwidth of the Interface Groups are reserved for Company use, e.g., pilot and carrier group alarm tones. Before the first point of switching, the Company will provide multiplex equipment to derive the transmission paths of frequency bandwidth of approximately 300 to 3000 Hz.

The interfaces are provided with individual transmission path SF supervisory signaling.

Interface Group I.D. No.	Transmission Frequency Bandwidth	Analog Hierarchy Level	Maximum No. of Channelized Voice Freq. Trans. Paths
3	60-108 kHz	Group	12
4	312-552 kHz	Supergroup	60
5	564-3084 kHz	Mastergroup	600

RECEIVED
MAR - 3 1997
ALASKA PUBLIC UTILITIES COMM.

ACCESS SERVICES

11. Access Service Interfaces and Transmission Specifications (Cont'd)
    11.1 Switched Access Service (Cont'd)
        11.1.1 Transport Interface Groups (Cont'd)

(D) Interface Groups 6 through 10: Interface Groups 6 through 10 provide digital transmission at the point of termination at the customer designated premises. The various interfaces are capable of transmitting electrical signals at the nominal bit rates illustrated following, with the capability to channelize voice frequency transmission paths. Before the first point of switching, when analog switching utilizing analog terminations is provided, the Company will provide multiplex and channel bank equipment to derive transmission paths of a frequency bandwidth of approximately 300 to 3000 Hz. When digital switching or analog switching with digital carrier terminations is provided, the Company will provide, at the first point of switching, a DS1 signal(s) in D3/D4 format.

The interfaces are provided with individual transmission path bit stream supervisory signaling.

Interface Group I.D. No.	Nominal Bit Rate (Mbps)	Digital Hierarchy Level	Maximum No. of Channelized Voice Freq. Trans. Paths
6	1.544	DS1	24
7	3.152	DS1C	48
8	6.312	DS2	96
9	44.736	DS3	672
10	274.176	DS4	4032

(E) Transport Optional Features: Where transmission facilities permit, the Company will, at the option of the customer, provide the following features in association with Transport. An Access Order Charge is applicable on a per order basis when non chargeable optional features are added subsequent to the installation of service.

RECEIVED
MAR - 3 1997
ALASKA PUBLIC UTILITIES COMM.

ACCESS SERVICES

11. Access Service Interfaces and Transmission Specifications (Cont'd)
    11.1 Switched Access Service (Cont'd)
        11.1.1 Transport Interface Groups (Cont'd)
            (E) Transport Optional Features (Cont'd)

Customer Specified Entry Switch Receive Level: Customer Specified Entry Switch Receive Level allows the customer to specify the receive transmission level at the first point of switching. The range of transmission levels which may be specified is describe in Technical Reference TR-NPL-000334. This feature is available with Interface Groups 2 through 10 for Feature Groups A and B.

Customer Specification of Transport Termination: Customer Specification of Transport Termination allows the customer to specify, for Feature Group B routed directly to an end office or access tandem, a four-wire termination of the Transport at the first point of switching in lieu of a Company selected two-wire termination. This option is available only when the Feature Group B arrangement is provided with Type B Transmission Specifications.

Supervisory Signaling: Supervisory Signaling allows the customer to order an optional supervisory signaling arrangement for each transmission path provided where the transmission parameters permit, and where signaling conversion is required by the customer to meet its signaling capability.

The Interface Groups, as described in (A) through (D) preceding, represent industry standard arrangements. Where transmission parameters permit, the customer may select the following optional signaling arrangements in place of signaling arrangements normally associated with the Interface Groups.

For Interface Groups 1 and 2 associated with FGB or FGD

DX Supervisory Signaling
E&M Type I Supervisory Signaling,
E&M Type II Supervisory Signaling, or
E&M Type III Supervisory Signaling,

RECEIVED
MAR - 3 1997
ALASKA PUBLIC UTILITIES COMM.

GCI COMMUNICATION CORP.

ACCESS SERVICES

11. Access Service Interfaces and Transmission Specifications (Cont'd)
    11.1 Switched Access Service (Cont'd)
        11.1.1 Transport Interface Groups (Cont'd)
            (E) Transport Optional Features (Cont'd)

For Interface Group 2 associated with FGB or FGD and in addition to the preceding.

SF Supervisory Signaling, or Tandem Supervisory Signaling

For Interface Groups 3 through 5

Optional Supervisory Signaling Not Available

For Interface Groups 6 through 10

These Interface Groups may, at the option of the customer, be provided with individual transmission path SF supervisory signaling where such signaling is available in Company central offices. Generally such signaling is available only where the first point of switching provides an analog (i.e., non digital) interface to the transport termination.

Additionally, in (F) following, there is a matrix of available Premises Interface Codes as a function of Interface Group, Company Switch Supervisory Signaling and Feature Group.

(F) Available Premises Interface Codes: Following is a matrix showing premises interface codes which are available for each Interface Group. Their availability is a function of the Company switch supervisory signaling and Feature Group. For explanations of these codes, see the Parameter Codes and Options as set forth in 11.2.2(A) following.

Interface Group	Company Switch Supervising Signaling	Premises Interface Code	Feature Group A	B	D
1	LO	2LS2	X		
	LO	2LS3	X		

RECEIVED
MAR - 3 1997
ALASKA PUBLIC UTILITIES COMM.

GCI COMMUNICATION CORP.

ACCESS SERVICES

11. Access Service Interfaces and Transmission Specifications (Cont'd)
11.1 Switched Access Service (Cont'd)
11.1.1 Transport Interface Groups (Cont'd)
(F) Available Premises Interface Codes (Cont'd)

Interface Group	Company Switch Supervising Signaling	Premises Interface Code	Feature Group A	B	D
1 (Cont'd)	GO	2GS2	X		
	GO	2GS3	X		
	LO, GO,	2DX3	X		
	LO, GO,	4EA3-E	X		
	LO, GO	4EA3-M	X		
	LO, GO,	6EB3-E	X		
	LO, GO	6EB3-M	X		
	RV,EA,EB,EC	2DX3		X	X
	RV,EA,EB,EC	4EA3-E		X	X
	RV,EA,EB,EC	4EA3-M		X	X
	RV,EA,EB,EC	6EB3-E		X	X
	RV,EA,EB,EC	6EB3-M		X	X
	EA,EB,EC	6EC3			X
	RV	2RV3-O		X	X
	RV	2RV3-T		X	X
2	LO, GO	4SF2	X		
	LO, GO	4SF3	X		
	LO	4LS2	X		
	LO	4LS3	X		
	LO	6LS2	X		
	GO	4GS2	X		
	GO	4GS3	X		
	GO	6GS2	X		
	LO, GO	4DX2	X		
	LO, GO,	4DX3	X		
	LO, GO,	6EA2-E	X		
	LO, GO	6EA2-M	X		
	LO, GO,	8EB2-E	X		

RECEIVED
MAR - 3 1997
ALASKA PUBLIC UTILITIES COMM.

GCI COMMUNICATION CORP.

ACCESS SERVICES

11. Access Service Interfaces and Transmission Specifications (Cont'd)
11.1 Switched Access Service (Cont'd)
11.1.1 Transport Interface Groups (Cont'd)
(F) Available Premises Interface Codes (Cont'd)

Interface Group	Company Switch Supervising Signaling	Premises Interface Code	Feature Group A	B	D
2 (Cont'd)	LO, GO	8EB2-M	X		
	LO, GO	6EX2-B	X		
	RV, EA, EB, EC	4SF2		X	X
	RV, EA, EB, EC	4SF3		X	
	RV, EA, EB, EC	4DX2		X	X
	RV, EA, EB, EC	4DX3		X	
	RV, EA, EB, EC	6DX2			X
	RV, EA, EB, EC	6EA2-E		X	X
	RV, EA, EB, EC	6EA2-M		X	X
	RV, EA, EB, EC	8EB2-E		X	X
	RV, EA, EB, EC	8EB2-M		X	X
	EA, EB, EC	8EC2-M			X
	RV	4RV2-O		X	X
	RV	4RV2-T		X	X
	RV	4RV3-O		X	
	RV	4RV3-T		X	
3	LO, GO	4AH5-B	X		
	RV, EA, EB, EC	4AH5-B		X	X
4	LO, GO	4AH6-C	X		
	RV, EA, EB, EC	4AH6-C		X	X
5	LO, GO	4AH6-D	X		
	RV, EA, EB, EC	4AH6-D		X	X
6	LO, GO	4DS9-15		X	
	LO, GO	4DS9-15L		X	
	RV,EA,EB,EC	4DS9-15		X	X
	RV,EA,EB,EC	4DS9-15L		X	X

RECEIVED
MAR - 3 1997
ALASKA PUBLIC UTILITIES COMM.

ACCESS SERVICES

11. Access Service Interfaces and Transmission Specifications (Cont'd)
    11.1 Switched Access Service (Cont'd)
        11.1.1 Transport Interface Groups (Cont'd)
            (F) Available Premises Interface Codes (Cont'd)

Interface Group	Company Switch Supervising Signaling	Premises Interface Code	Feature Group A	B	D
7	LO, GO	4DS9-31	X		
	LO, GO	4DS9-31L	X		
	RV, EA, EB, EC	4DS9-31		X	X
	RV, EA, EB, EC	4DS9-31L		X	X
8	LO, GO	4DS0-63	X		
	LO, GO	4DS0-63L	X		
	RV, EA, EB, EC	4DS0-63		X	X
	RV, EA, EB, EC	4DS0-63L		X	X
9	LO, GO	4DS6-44	X		
	LO, GO	4DS6-44L	X		
	RV, EA, EB, EC	4DS6-44		X	X
	RV, EA, EB, EC	4DS6-44L		X	X
10	LO, GO	4DS6-27	X		
	LO, GO	4DS6-27L	X		
	RV, EA, EB, EC	4DS6-27		X	X
	RV, EA, EB, EC	4DS6-27L		X	X

11.1.2 Standard Transmission Specifications

Descriptions of the transmission specifications available with each Feature Group as a function of the Interface Group selected by the customer, are set forth in (A) through (D) following. Descriptions of each of these Standard Transmission Specifications and the two Data Standard Transmission Parameters mentioned are set forth respectively in (E) through (G) and 11.1.3(A) and (B) following.

RECEIVED
MAR - 3 1997
ALASKA PUBLIC UTILITIES COMM.

ACCESS SERVICES

11. Access Service Interfaces and Transmission Specifications (Cont'd)
    11.1 Switched Access Service (Cont'd)
        11.1.2 Standard Transmission Specifications (Cont'd)

(A) Feature Group A: FGA is provided with either Type B or Type C Transmission Specifications. The specifications for the associated parameters are guaranteed to the first point of switching. Type C Transmission Specifications are provided with Interface Group 1 and Type B is provided with Interface Groups 2 through 10. Type DB Data Transmission Parameters are provided with FGA to the first point of switching.

(B) Feature Group B: FGB is provided with either Type B or Type C Transmission Specifications. The specifications for the associated parameters are guaranteed to the end office when routed directly or to the first point of switching when routed via an access tandem. Type C Transmission Specifications are provided with Interface Groups 1 and Type B is provided with Interface Groups 2 through 10. Type DB Data Transmission Parameters are provided with FGB to the first point of switching.

(C) Reserved for Future Use

(D) Feature Group D: FGD is provided with either Type A, Type B or Type C Transmission Specifications as follows:

- When routed to the end office of either Type B or C is provided.
- When routed to an access tandem only Type A is provided.
- Type A is provided on the transmission path from the access tandem to the end office.

Type C Transmission Specifications are provided with Interface Group 1. Type A and Type B Transmission Specifications are provided with interface Groups 2 through 10. Type DB Data Transmission Parameters are provided with FGD for the transmission path between the customer designated premises and the end office when directly routed to the end office. Type DA Data Transmission Parameters are provided for the transmission path between the customer designated premises and the access tandem and between the access tandem and the end office when routed via an access tandem.

RECEIVED
MAY 23 1997
ALASKA PUBLIC UTILITIES COMM.

GCI COMMUNICATION CORP.

ACCESS SERVICES

11. Access Service Interfaces and Transmission Specifications (Cont'd)
    11.1 Switched Access Service (Cont'd)
        11.1.2 Standard Transmission Specifications (Cont'd)

(E) Type A Transmission Specifications: Type A Transmission Specifications is provided with the following parameters:

(1) Loss Deviation: The maximum Loss Deviation of the 1004 Hz loss relative to the Expected Measured Loss (EML) is +/- 2.0 dB.

(2) Attenuation Distortion: The maximum Attenuation Distortion in the 404 to 2804 Hz frequency band relative to the loss at 1004 Hz is -1.0 dB to +3 dB.

(3) C-Message Noise: The maximum C-Message Noise for the transmission path at the route miles listed is less than or equal to:

Route Miles	C-Message Noise
less than 50	32 dBmCO
51 to 100	34 dBmCO
101 to 200	37 dBmCO
201 to 400	40 dBmCO
401 to 1000	42 dBmCO

(4) C-Notch Noise: The maximum C-Notch Noise, utilizing a -16 dBmO holding tone, is less than or equal to 45 dBmCO.

(5) Echo Control: Echo Control, identified as Equal Level Echo Path Loss, and expressed as Echo Return Loss and Singing Return Loss, is dependent on the routing, i.e., whether the service is routed directly from the customer's point of termination (POT) to the end office or via an access tandem. It is equal to or greater than the following:

	Echo Return Loss	Singing Return Loss
POT to Access Tandem	21 dB	14 dB
POT to End Office		
- Direct	N/A	N/A
- Via Access Tandem	16 dB	11 dB

RECEIVED
MAR -3 1997
ALASKA PUBLIC UTILITIES COMM.

ACCESS SERVICES

11. Access Service Interfaces and Transmission Specifications (Cont'd)
    11.1 Switched Access Service (Cont'd)
        11.1.2 Standard Transmission Specifications (Cont'd)
            (E) Type A Transmission Specifications (Cont'd)

(6) Standard Return Loss: Standard Return Loss expressed as Echo Return Loss and Singing Return Loss on two-wire ports of a four-wire point of termination shall be equal to or greater than:

Echo Return Loss	Singing Return Loss
5 dB	2.5 dB

(F) Type B Transmission Specifications: Type B Transmission Specifications are provided with the following parameters:

(1) Loss Deviation: The maximum Loss deviation of the 1004 Hz loss relative to the Expected Measured Loss (EML) is +/- 2.5 dB.

(2) Attenuation Distortion: The maximum Attenuation Distortion in the 404 to 2804 Hz frequency band relative to loss at 1004 Hz is -2.0 dB to +4.0 dB.

(3) C-Message Noise: The maximum C-Message Noise for the transmission path at the route miles listed is less than or equal to:

	C-Message Noise*	
Route Miles	Type B1	Type B2
less than 50	32 dBrnCO	35 dBrnCO
51 to 100	33 dBrnCO	37 dBrnCO
101 to 200	35 dBrnCO	40 dBrnCO
201 to 400	37 dBrnCO	43 dBrnCO
401 to 1000	39 dBrnCO	45 dBrnCO

(4) C-Notch Noise: The maximum C-Notch Noise, utilizing a -16 dBmO holding tone is less than or equal to 47 dBrnCO.

* For Feature Group D only Type B2 will be provided. For Feature Groups A and B, Type B1 or B2 will be provided as set forth in Technical TR-NPL-000334.

RECEIVED
MAR - 3 1997
ALASKA PUBLIC UTILITIES COMM.

GCI COMMUNICATION CORP.

ACCESS SERVICES

11. Access Service Interfaces and Transmission Specifications (Cont'd)
11.1 Switched Access Service (Cont'd)
11.1.2 Standard Transmission Specifications (Cont'd)
(F) Type B Transmission Specifications (Cont'd)

(5) Echo Control: Echo Control, identified as Impedance Balance for FGA and FGB and Equal Level Echo Path Loss for FGD, and expressed as Echo Return Loss (ERL) and Singing Return Loss (SRL), is dependent on the routing, i.e., whether the service is routed directly from the customer's point of termination (POT) to the end office or via an access tandem. The ERL and STL also differ by Feature Group, type of termination, and type of transmission path. They are greater than or equal to the following:

	Echo Return Loss	Singing Return Loss
POT to Access Tandem		
- Terminated in 4-Wire trunk	21 dB	14 dB
- Terminated in 2-Wire trunk	16 dB	11 dB
POT to End Office		
- Direct	16 dB	11 dB
- Via Access Tandem		
* For FGB access	8 dB	4 dB

(6) Standard Return Loss: Standard Return Loss, expressed as Echo Return Loss and Singing Return Loss, on two-wire ports of a four-wire point of termination shall be equal to or greater than:

Echo Return Loss	Singing Return Loss
5 dB	2.5 dB

(G) Type C Transmission Specifications: Type C Transmission Specifications are provided with the following parameters:

(1) Loss Deviation: The maximum Loss Deviation of the 1004 Hz Loss relative to the Expected Measured Loss (EML) is +/- 3.0 dB.

RECEIVED
MAR -3 1997
ALASKA PUBLIC UTILITIES COMM.

ACCESS SERVICES

11. Access Service Interfaces and Transmission Specifications (Cont'd)
    11.1 Switched Access Service (Cont'd)
        11.1.2 Standard Transmission Specifications (Cont'd)
            (G) Type C Transmission Specifications (Cont'd)

(2) Attenuation Distortion: The maximum Attenuation Distortion in the 404 to 2804 Hz frequency band relative to loss at 1004 Hz is -2.0 dB to +5.5 dB.

(3) C-Message Noise: The maximum C-Message Noise for the transmission patch at the route miles listed is less than or equal to:

	C-Message Noise*	
Route Miles	Type C1	Type C2
less than 50	32 dBmCO	38 dBmCO
51 to 100	33 dBmCO	39 dBmCO
101 to 200	35 dBmCO	41 dBmCO
201 to 400	37 dBmCO	43 dBmCO
401 to 1000	39 dBmCO	45 dBmCO

(4) C-Notch Noise: The maximum C-Notch Noise, utilizing a -16 dBmO holding tone is less than or equal to 47 dBmCO.

(5) Echo Control: Echo Control, identifies as Return Loss and expressed as Echo Return Loss and Singing Return Loss is dependent on the routing, i.e., whether the service is routed directly from the customer's point of termination (POT) to the end office or via an access tandem. It is equal to or greater than the following:

* For FGD, only Type C2 will be provided. For FGA and FGB, Type C1 and C2 will be provided as set forth in Technical Reference TR-NPL-000334.

RECEIVED
MAR - 3 1997
ALASKA PUBLIC UTILITIES COMM.

ACCESS SERVICES

11. Access Service Interfaces and Transmission Specifications (Cont'd)
    11.1 Switched Access Service (Cont'd)
        11.1.2 Standard Transmission Specifications (Cont'd)
            (G) Type C Transmission Specifications (Cont'd)
                (5) Echo Control (Cont'd)

	Echo Return Loss	Singing Return Loss
POT to Access Tandem	13 dB	6 dB
POT to End Office		
- Direct	13 dB	6 dB
- Via Access Tandem (for FGB only)	8 dB	4 dB

11.1.3 Data Transmission Parameters

Two types of data Transmission Parameters, i.e., Type DA and Type DB, are provided for the Feature Group arrangements. Type DB is provided with Feature Groups A and B and also with Feature Group D when Feature Group D is directly routed to the end office. Type DA is only provided with Feature Group D and only when routed via an access tandem. Following are descriptions of each.

(A) Data Transmission Parameters Type DA

(1) Signal to C-Notched Noise Ratio: The Signal to C-Notched Noise Ratio is equal to or greater than 33 dB.

(2) Envelope Delay Distortion: The maximum Envelope Delay Distortion for the frequency banks and route miles specified is:

604 to 2804 Hz	
less than 50 route miles	500 microseconds
equal to or greater than 50 route miles	900 microseconds

1004 to 2404 Hz	
less than 50 route miles	200 microseconds
equal to or greater than 50 route miles	400 microseconds

RECEIVED
MAY 23 1997
ALASKA PUBLIC UTILITIES COMM.

ACCESS SERVICES

11. Access Service Interfaces and Transmission Specifications (Cont'd)
    11.1 Switched Access Service (Cont'd)
        11.1.3 Data Transmission Parameters (Cont'd)
            (A) Data Transmission Parameters Type DA (Cont'd)

(3) Impulse Noise Counts: The Impulse Noise Counts exceeding a 65 dBrnCO threshold in 15 minutes is no more than 15 counts.

(4) Intermodulation Distortion: The Second Order (R2) and Third Order (r3) Intermodulation Distortion products are equal to or greater than:

Second Order (R2)	33 dB
Third Order (R3)	37 dB

(5) Phase Jitter: The Phase Jitter over the 4-300 Hz frequency band is less than or equal to 5° peak-to-peak.

(6) Frequency Shift: The maximum Frequency Shift does not exceed -2 to +2 Hz.

(B) Data Transmission Parameters Type DB

(1) Signal to C-Notched Noise Ratio: The signal to C-Notched Noise Ratio is equal to or greater than 30 dB.

(2) Envelope Delay Distortion: The maximum Envelope Delay Distortion for the frequency bands and route miles specified is:

604 to 2804 Hz	
less than 50 route miles	800 microseconds
equal to or greater than 50 route miles	1000 microseconds

1004 to 2404 Hz	
less than 50 route miles	320 microseconds
equal to or greater than 50 route miles	500 microseconds

RECEIVED
MAY 23 1997
ALASKA PUBLIC UTILITIES COMM.

ACCESS SERVICES

11. Access Service Interfaces and Transmission Specifications (Cont'd)
    11.1 Switched Access Service (Cont'd)
        11.1.3 Data Transmission Parameters (Cont'd)
            (B) Data Transmission Parameters Type DB (Cont'd)

(3) Impulse Noise Counts: The Impulse Noise counts exceeding a 67 dBrnCO threshold in 15 minutes is no more than 15 counts.

(4) Intermodulation Distortion: The Second Order (R2) and Third Order (R3) Intermodulation Distortion products are equal to or greater than:

Second Order (R2)	31 dB
Third Order (R3)	34 dB

(5) Phase Jitter: The Phase Jitter over the 4-300 Hz frequency band is less than or equal to 7° peak-to-peak.

(6) Frequency Shift: The maximum Frequency Shift does not exceed -2 to +2 Hz.

11.2 Special Access Service

This section explains and lists the codes that the customer must specify when ordering Special Access Service. These codes provide a standardized means to relate the services being ordered to Special Access Service offerings contained in Section 7 preceding.

When ordering, the type of Special Access Service is described by two code sets, the Network Channel (NC) code and the Network Channel Interface (NCI) codes.

The Network Channel (NC) code consists of two elements. Element one is a Channel Service Code (character positions 1 and 2) that describes the channel service type in an abbreviated form. Element two is an Optional Feature Code (character positions 3 and 4) that identifies option codes available for each channel service code, such as C-conditioning or Improved Return Loss.

RECEIVED
MAR -3 1997
ALASKA PUBLIC UTILITIES COMM.

ACCESS SERVICES

11. Access Service Interfaces and Transmission Specifications (Cont'd)
11.2 Special Access Service (Cont'd)

The Network Channel Interface (NCI) is used to identify interface specifications associated with a particular channel. This code describes the total wires, protocol, impedance, protocol options and transmission level point(s) reflecting physical and electrical characteristics between the Company and the customer.

On the following three (3) pages are examples which explain the specific characters of the codes and which reference matrices and charts used in developing the codes. Included in the matrices are Service Designator (SD) codes which are used to identify variations of service within service types. The SD and NC codes are displayed as components of the matrices designated as Technical Specifications packages in (A) through (E) following. Through the use of these matrices, SD codes may be converted to NC codes for service ordering purposes.

A chart is also provided in 11.3.2 following which contains information necessary to develop NCI codes.

Comprehensive lists of allowed Network Channel (NC) and Network Channel Interface (NCI) codes are contained in Special Report SR-ISD-000307. However, not all services contained in this Special Report may be offered by the Company at this time.

Lastly, 11.3.2.C following provides a list of compatible Network Channel Interfaces inasmuch as the Network Channel Interfaces associated with a given service need not always be the same, but all must be compatible.

Example No. 1: If the customer wishes to order a 4-wire voice grade circuit with 600 Ohms impedance, capable of data transmission, and with improved return loss, the customer might specify the following:

NC	NCI	SECNCI
LG-R	04DB2	04DA2-S

NC Code:
LG = Voice Grade Channel Service, VG6
-R = Improved Return Loss

RECEIVED
MAR - 3 1997
ALASKA PUBLIC UTILITIES COMM.

ACCESS SERVICES

11. Access Service Interfaces and Transmission Specifications (Cont'd)
11.2 Special Access Service (Cont'd)

NCI Code:

04 =	Number of physical wires at CDP
DB =	Data stream in VF frequency band at the customer designated main terminal location 600 Ohms impedance

SECNCI (Secondary NCI Code):

04 =	Number of physical wires at CDP
DA =	Data stream in VG frequency at the customer designated secondary terminal location
2 =	600 Ohms impedance
S =	Sealing current option for 4-wire transmission

In the above example the NCI (Network Channel Interface) code is the interface requested at the customer's POT (Point of Termination) and the SECNCI (Secondary Network Channel Interface) code represents the interface at the end office serving the End User.

Example No. 2: If the customer wishes to order a FX circuit to a station, with 600 Ohms impedance, loop start signaling, which is 4-wire at the CDP and 2-wire at the end-user, the customer might specify:

NC	NCI	SECNCI
LC--	04LO2	02LS2

NC Code:

LC =	Voice Grade Channel Service, VG2
-- =	No Optional Features

NCI Code:

04 =	Number of physical wires at CDP
LO =	Loop start, loop signaling - open end
2 =	600 Ohms impedance

SECNCI (Secondary NCI Code):

02 =	Number of physical wires at CDP
LS =	Loop start signaling - closed end
2 =	600 Ohms impedance

RECEIVED
MAR - 3 1997
ALASKA PUBLIC UTILITIES COMM.

ACCESS SERVICES

11. Access Service Interfaces and Transmission Specifications (Cont'd)
11.2 Special Access Service (Cont'd)

Example No. 3: If the customer wishes to order a 1.544 Mbps Hi-cap facility with no channel options such as CO multiplexing, the customer might specify the following:

NC	NCI	SECNCI
HC--	04DS9-15	04DS9-15

NC Code:
- HC = High Capacity Channel Service, HC1
- -- = No Optional Features

NCI, SECNCI Code:
- 04 = Number of physical wires at CDP
- DS = Digital hierarchy interface
- 9 = 100 Ohms impedance
- 15 = 1.544 Mbps (DS1) format

The preceding three examples use information contained in Special Report SR-ISD-000307.

11.2.1 Network Channel (NC) Codes

In order to determine the NC code appropriate for the service to be ordered, the type of Special Access Service the customer wishes must be identified. This identification is accomplished by a Service Designator (SD) code. The broad categories of Service Designator codes (e.g., VG, etc.) are set forth in Section 7 preceding. Variations within service type (e.g., VG1, etc.) are described in the various Technical Publications cited in (A) through (E) following. Having determined the specific service type to be ordered and its SD code, and having used the appropriate Technical Publication, the customer should match the SD code to the NC code using the following matrices. Once the NC code has been determined the Network Channel Interface (NCI) code may be developed using the information set forth in 11.2.1 following and the guidelines concerning specific parameters available for each service type as set forth in the specified Technical Publication.

RECEIVED
MAR - 3 1997
ALASKA PUBLIC UTILITIES COMM.

ACCESS SERVICES

11. Access Service Interfaces and Transmission Specifications (Cont'd)
11.2 Special Access Service (Cont'd)
11.2.1 Network Channel (NC) Codes (Cont'd)

(A) Technical Specifications Packages Voice Grade Service

	Package VG-													
SD Code	C*	1	2	3	4	5	6	7	8	9	10	11	12	W
NC Code	LQ	LB	LC	LD	LE	LF	LG	LH	LJ	LK	LN	LP	LR	SE
Parameter														
Attenuation Distortion	X	X	X	X	X	X	X	X	X	X	X	X	X	X
C-Message Noise	X	X	X	X	X	X	X	X	X	X	X	X	X	X
Echo Control X	X	X	X		X		X	X			X	X	X	
Envelope Delay Distortion	X						X	X	X	X	X	X	X	X
Frequency Shift	X						X	X	X	X	X	X	X	X
Impulse Noise	X					X	X	X	X	X	X	X	X	X
Intermodulation Distortion	X						X	X	X	X	X	X		X
Loss Deviation	X	X	X	X	X	X	X	X	X	X	X	X	X	X
Phase Hits, Gain Hits & Dropouts	X													
Phase Jitter	X						X	X	X	X	X	X		X
Signal-to-C Message Noise					X									
Signal-to-C Notch Noise X					X	X	X	X	X	X	X	X	X	

The technical specifications for these parameters (except for dropouts, phase hits, and gain hits) are described in Technical References TR-NPL-000334 and TR-NPL-000335. The technical specifications for dropouts, phase hits, and gain hits are described in Technical Reference PUB41004 Table 4.

* The desired parameters are selected by the customer from the list of available parameters.

RECEIVED

MAY 23 1997

ALASKA PUBLIC UTILITIES COMM.

GCI COMMUNICATION CORP.

ACCESS SERVICES

11. Access Service Interfaces and Transmission Specifications (Cont'd)
    11.2 Special Access Service (Cont'd)
        11.2.1 Network Channel (NC) Codes (Cont'd)
            (A) Technical Specifications Packages Voice Grade Service (Cont'd)

	Package VG-													
SD Code	C*	1	2	3	4	5	6	7	8	9	10	11	12	W
NC Code	LQ	LB	LC	LD	LE	LF	LG	LH	LJ	LK	LN	LP	LR	SE
Optional Features and Functions														
Central Office Bridging Capability	X		X			X	X				X	X	X	
Conditioning:														
• C-Type	X					X	X	X	X	X	X			
• Improved Attenuation Distortion	X					X	X	X	X	X	X			
• Improved Envelope Delay Distortion	X					X	X	X	X	X	X			
• Data Capability	X						X	X			X			
Improved Two-Wire Voice Transmission Signaling Capability	X	X	X	X				X	X	X				X
Central Office Multiplexing	X						X							
Sealing Current	X						X							
Telephoto Capability	X											X		
Customer Specified Premises Receive Level	X		X	X				X	X	X				
Improved Return Loss for Effective 4-Wire Transmission	X	X	X	X	X	X	X	X	X	X	X	X	X	X
for Effective 2-Wire Transmission	X		X	X				X						
PPSN Interface Arrangement	X									X				
Selective Signaling Arrangement	X		X			X	X					X		
Transfer Arrangement	X	X	X	X	X	X	X	X	X	X	X	X	X	X

Tariff Advice No. Pursuant to U-96-24(5) Effective: February 4, 1997

Issued by: GCI Communication Corp.

By: Title: Director, Rates & Tariffs

RECEIVED
MAR - 3 1997
ALASKA PUBLIC UTILITIES COMM.

GCI COMMUNICATION CORP.

ACCESS SERVICES

11. Access Service Interfaces and Transmission Specifications (Cont'd)
    11.2 Special Access Service (Cont'd)
        11.2.1 Network Channel (NC) Codes (Cont'd)

(B) Technical Specifications Packages Digital Data Service

	Package					
SD Code	D1	D2	D3	D4	D5	D6
NC Code	XA	XB	XG	XH	XE	YN
Parameter/Hubbed						
Error-Free Seconds	X	X	X	X	X	X
Optional Features and Functions/Hubbed						
Central Office Bridging Capability	X	X	X	X	X	X
Transfer Arrangement	X	X	X	X	X	X
PPSN Interface Xsfer Arrangement	X	X	X	X	X	X

The Company will provide a channel capable of meeting a monthly average performance equal to or greater than 99.875% error-free seconds (if provided through a Digital Data hub) while the channel is in service, if it is measured through a CSU equivalent which is designed, manufactured, and maintained to conform with the specifications contained in Technical Reference PUB 62310.

Voltages which are compatible with Digital Data Service are delineated in Technical Reference TR-NPL-000341.

RECEIVED
MAR - 3 1997
ALASKA PUBLIC UTILITIES COMM.

ACCESS SERVICES

11. Access Service Interfaces and Transmission Specifications (Cont'd)
    11.2 Special Access Service (Cont'd)
        11.2.1 Network Channel (NC) Codes (Cont'd)

(C) Technical Specifications Packages High Capacity Service

	Package					
SD Code	HC0	HC1	HC1C	HC2	HC3	HC4
NC Code	HS	HC	HD	HE	HF	HG
Parameter						
Error-Free Seconds		X				
Optional Features and Functions						
Automatic Loop Transfer		X				
Central Office Multiplexing:						
DS4 to DS1						X
DS3 to DS1					X	
DS2 to DS1				X		
DS1C to DS1			X			
DS1 to Voice		X				
DS1 to DS0		X				
DS0 to Subrate*	X					
Transfer Arrangement		X				

A channel with technical specifications package HC1 will be capable of an error-free second performance of 98.75% over a continuous 24 hour period as measured at the 1.544 Mbps rate through a CSU equivalent which is designed, manufactured, and maintained to conform with the specifications contained in Technical Reference PUB 62411.

* Available only on a channel of 1.544 Mbps facility to a Company hub.

RECEIVED
MAR - 3 1997
ALASKA PUBLIC UTILITIES COMM.

GCI COMMUNICATION CORP.

ACCESS SERVICES

11. Access Service Interfaces and Transmission Specifications (Cont'd)
    11.2 Special Access Service (Cont'd)
        11.2.1 Network Channel (NC) Codes (Cont'd)

(D) Technical Specifications Packages Program Audio Service

	Package				
SD Code	APC*	AP1	AP2	AP3	AP4
NC Code	PQ	PE	PF	PJ	PK
Parameter					
Actual Measured Loss	X	X	X	X	X
Amplitude Tracking	X				
Crosstalk	X	X	X	X	X
Distortion Tracking	X				
Gain/Frequency Distortion	X	X	X	X	X
Group Delay	X				
Noise	X	X	X	X	X
Phrase Tracking	X				
Short-Term Gain Stability	X				
Short-Term Loss	X				
Total Distortion	X	X	X	X	X
Optional Features and Functions					
Central Office Bridging Capability	X	X	X	X	X
Gain Conditioning	X	X	X	X	X
Stereo	X				X

The technical specifications are described in Technical Reference TR-NPL-000337 and associated Addendum.

* The desired parameters are selected by the customer from the list of available parameters.

RECEIVED
MAR - 3 1997
ALASKA PUBLIC UTILITIES COMM.

GCI COMMUNICATION CORP.

ACCESS SERVICES

11. Access Service Interfaces and Transmission Specifications (Cont'd)
    11.2 Special Access Service (Cont'd)
        11.2.1 Network Channel (NC) Codes (Cont'd)

(E) Technical Specifications Packages Video Service

	Package		
SD Code	TVC*	TV1	TV2
NC Code	TQ	TV	TW
Video Parameters			
Insertion Gain	X	X	X
Field-Time Distortion	X	X	X
Short-Time Distortion	X	X	X
Chrominance-Luminance Gain Inequality	X	X	X
Chrominance-Luminance Delay Inequality	X	X	X
Amplitude/Frequency Characteristic Luminance Non-Linear Distortion	X	X	X
Chrominance Non-Linear Gain Distortion	X	X	X
Chrominance Non-Linear Phase Distortion	X	X	X
Transient Synchronizing Signal Non-Linearly	X	X	X
Dynamic Gain Distortion-Picture Signal	X	X	X
Synchronizing Signal	X	X	X
Differential Gain	X	X	X
Differential Phase	X	X	X
Chrominance-Luminance Intermodulation	X	X	X
Audio Channel Parameters Associated with Video Service			
Insertion Gain	X	X	X
Amplitude/Frequency Characteristic	X	X	X
Total Harmonic Distortion & Noise	X	X	X
Maximum Steady-State Test Levels	X	X	X
Gain Differential Between Channels	X	X	
Phase Differential Between Channels	X	X	
Crosstalk	X	X	X
Audio-To-Video Time Differential	X	X	X

The technical specifications are described in Technical Reference TR-NPL-000338.

* The desired parameters are selected by the customer from the list of available parameters.

RECEIVED
MAR - 3 1997
ALASKA PUBLIC UTILITIES COMM.

ACCESS SERVICES

11. Access Service Interfaces and Transmission Specifications (Cont'd)
11.2 Special Access Service (Cont'd)

11.2.2 Network Channel Interface (NCI) Codes

The electrical interface with the Company for Special Access Services, is defined by an interface code. There are interface codes for both the customer designated premises and the point of termination.

(A) Parameter Codes and Options

Parameter Code	Option	Definition
AB -		accepts 20 Hz ringing signal at customer's point of termination
AC -		accepts 20 Hz ringing signal at customer's end user's point of termination
AH -		analog high capacity interface
	- B	60 kHz to 108 kHz (12 channels)
	- C	312 kHz to 552 kHz (60 channels)
	- D	564 kHz to 3084 kHz (600 channels)
CT -		Centrex Tie Trunk Termination
DA -		data stream in VF frequency band at customer's point of termination
DB -		data stream in VF frequency band at customer's point of termination
DC -		direct current or voltage
	- 1	monitoring interface with series RC combination (McCulloh format)
	- 2	Company energized alarm channel
DS -		digital hierarchy interface
	- 15	1.544 Mbps (DS1) format per Bellcore GR-54 plus D4
	- 15E	8-bit PCM encoded in one 64 kbps of the DS1 signal
	- 15F	8-bit PCM encoded in two 64 kbps of the DS1 signal
	- 15G	8-bit PCM encoded in three 64 kbps of the DS1 signal
	- 15H	14/11-bit PCM encoded in six 64 kbps of the DS1 signal

RECEIVED
MAR - 3 1997
ALASKA PUBLIC UTILITIES COMM.

ACCESS SERVICES

11. Access Service Interfaces and Transmission Specifications (Cont'd)
11.2 Special Access Service (Cont'd)
11.2.2 Network Channel Interface (NCI) Codes (Cont'd)
(A) Parameter Codes and Options (Cont'd)

Parameter Code	Option	Definition
DS	- 15J	1.544 Mbps format per Bellcore GR-54
	- 15K	1.544 Mbps format per Bellcore GR-54 plus extended framing format
	- 15L	1.544 Mbps (DS1) with SF signaling
	- 27	274.176 Mbps (DS4)
	- 27L	274.176 Mbps (DS4) with SF signaling
	- 31	3.152 Mbps (DS1C)
	- 31L	3.152 Mbps (DS1C) with SF signaling
	- 44	44.736 Mbps (DS3)
	- 44L	44.736 Mbps (DS3) with SF signaling
	- 63	6.312 Mbps (DS2)
	- 63L	6.312 Mbps (DS2) with SF signaling
DU -		digital access interface
	- 24	2.4 kbps
	- 48	4.8 kbps
	- 19	19.2 kbps
	- 56	56.0 kbps
	- 96	9.6 kbps
	- A	1.544 Mbps format per Bellcore GR-54
	- B	1.544 Mbps format per Bellcore GR-54 plus D4
	- C	1.544 Mbps format per Bellcore GR-54 plus extended framing format
DX -		duplex signaling interface at customer's point of termination
DY -		duplex signaling interface at customer's end user's point of termination

RECEIVED
MAR - 3 1997
ALASKA PUBLIC UTILITIES COMM.

ACCESS SERVICES

11. Access Service Interfaces and Transmission Specifications (Cont'd)
    11.2 Special Access Service (Cont'd)
        11.2.2 Network Channel Interface (NCI) Codes (Cont'd)
            (A) Parameter Codes and Options (Cont'd)

Parameter Code	Option	Definition
EA -	E	Type I E&M Lead Signaling. Customer at POT or customer's end user at POT originates on E Lead.
EA -	M	Type I E&M Lead Signaling. Customer at POT or customer's end user at POT originates on M Lead.
EB -	E	Type II E&M Lead Signaling. Customer at POT or customer's end user at POT originates on E Lead.
EB -	M	Type II E&M Lead Signaling. Customer at POT or customer's end user at POT originates on M Lead.
EC -		Type III E&M signaling at customer POT
EX -	A	tandem channel unit signaling for loop start or ground start and customer supplies open end (dial tone, etc.) functions.
EX -	B	tandem channel unit signaling for loop start or ground start and customer supplies closed end (dial pulsing, etc.) functions.
GO -		ground start loop signaling - open end function by customer or customer's end user.
GS -		ground start loop signaling - closed end function by customer or customer's end user.
IA -		E.I.A. (25 pin RS-232)
LA -		end user loop start loop signaling-Type A OPS registered port open end.
LB -		end user loop start loop signaling-Type B OPS registered port open end.
LC -		end user loop start loop signaling-Type C OPS registered port open end.
LO -		loop start loop signaling - open end function by customer or customer's end user
LR -		20 Hz automatic ringdown interface at customer with Company provided PLAR

RECEIVED
MAR - 3 1997
ALASKA PUBLIC UTILITIES COMM.

GCI COMMUNICATION CORP.

ACCESS SERVICES

11. Access Service Interfaces and Transmission Specifications (Cont'd)
    11.2 Special Access Service (Cont'd)
        11.2.2 Network Channel Interface (NCI) Codes (Cont'd)
            (A) Parameter Codes and Options (Cont'd)

Parameter Code	Option	Definition
LS -		loop start loop signaling - closed end function by customer or customer's end user
NO -		no signaling interface, transmission only
PG -		program transmission - no dc signaling
	- 1	nominal frequency from 50 to 15000 Hz
	- 3	nominal frequency from 200 to 3500 Hz
	- 5	nominal frequency from 100 to 5000 Hz
	- 8	nominal frequency from 50 to 8000 Hz
PR		protective relaying*
RV -	0	reverse battery signaling, one way operation, originate by customer
	- T	reverse battery signaling, one way operation, terminate function by customer or customer's end user
SF -		single frequency signaling with VF band at either customer POT or customer's end user POT
	- 2	20.0 milliamperes
	- 3	3.0 milliamperes
	- 6	62.5 milliamperes
TV -		television interface
	- 1	combined (diplexed) video and one audio signal
	- 2	combined (diplexed) video and one audio signals
	- 5	video plus one (or two) audio 5 kHz signal(s) or one (or two) two wire
	- 15	video plus one (or two) audio 15 kHz signal(s)

* Available only for the transmission of audio tone protective relaying signals used in the protection of electric power systems during fault conditions.

RECEIVED
MAR - 3 1997
ALASKA PUBLIC UTILITIES COMM.

ACCESS SERVICES

11. Access Service Interfaces and Transmission Specifications (Cont'd)
    11.2 Special Access Service (Cont'd)
        11.2.2 Network Channel Interface (NCI) Codes (Cont'd)

(B) Impedance: The nominal reference impedance with which the channel will be terminated for the purpose of evaluating transmission performance:

Value (ohms)	Code(s)
110	0
150	1
600	2
900	3*
135	5
75	6
124	7
Variable	8
100	9

* For those interface codes with a 4-wire transmission path at the customer designated POT, rather than a standard 900 ohm impedance the code (3) denotes a customer provided transmission equipment termination. Such terminations were provided to customers in accordance with the FCC Docket No. 20099 Settlement Agreement.

(C) Compatible Network Channel Interfaces

(1) Voice Grade

Compatible CIs		Compatible CIs		Compatible CIs	
2AB2	2AC2	2DB2	2DA2	2LR2	2LR2
2AB3	2AC2	2DB3	2DA2	2LR3	2LR2
2CT3	2DY2 4DS8	2DX3	2LA2 2LB2	2LS	2GS 2LS

RECEIVED
MAR - 3 1997
ALASKA PUBLIC UTILITIES COMM.

GCI COMMUNICATION CORP.

ACCESS SERVICES

11. Access Service Interfaces and Transmission Specifications (Cont'd)
11.2 Special Access Service (Cont'd)
11.2.2 Network Channel Interface (NCI) Codes (Cont'd)
(C) Compatible Network Channel Interfaces (Cont'd)
(1) Voice Grade (Cont'd)

Compatible CIs		Compatible CIs		Compatible CIs	
	4DX2		2LC2		4GS
	4DX3		2LO3		4LS
	4DY2		2LS2		
	4EA2-E		2LS3	2LS2	2LA2
	4EA2-M				2LB2
	4SF2	2GO2	2GS2		2LC2
	4SF3		2GS3		
	6DX2			2LS3	2LA2
	6DY2	2GO3	2GS2		2LB2
	6DY3		2GS3		2LC2
	6EA2-E				
	6EA2-M	2GS	2GS	2NO2	2DA2
	6EB2-E		2LS		2NO2
	6EB2-M		4GS		
	6EB3-E		4LS	2NO3	2NO2
	8EB2-E				2PR2
	8EB2-M	2LO2	2LS2		
	8EC2		2LS3	2TF3	2TF2
	9DY2				
	9DY3	2LO3	2LS2		
	9EA2		2LS3		
	9EA3				
4AB2	2AC2				
	4AB2				
	4AC2				
	4SF2				
4AB3	2AC2				
	4AC2				
	4SF2				

RECEIVED

MAR - 3 1997

ALASKA PUBLIC UTILITIES COMM.

GCI COMMUNICATION CORP.

ACCESS SERVICES

11. Access Service Interfaces and Transmission Specifications (Cont'd)
    11.2 Special Access Service (Cont'd)
        11.2.2 Network Channel Interface (NCI) Codes (Cont'd)
            (C) Compatible Network Channel Interfaces (Cont'd)
                (1) Voice Grade (Cont'd)

Compatible CIs		Compatible CIs		Compatible CIs	
4AC2	2AC2				
	4AC2				
		4DS8-	2AC2	4DS8-	4DG2
			2DA2		4LR2
			2DY2		4LS2
			2GO2		4NO2
4DA2	4DA2		2GO3		4PR2
			2GS2		4RV2-T
4DB2	2DA2		2GS3		4SF2
	2NO2		2LA2		4SF3
	2PR2		2LB2		4TF2
	4DA2		2LC2		6DA2
	4DB2		2LO2		6DY2
	4NO2		2LO3		6DY3
	4PR2		2LR2		6EA2-E
	6DA2		2LS2		6EA2-M
			2LS3		6EB2-E
4DD3	2DE2		2NO2		6EB2-M
	4DE2		2PR2		6GS2
			2RV2-T		6LS2
			2TF2		8EB2-E
			4AC2		8EB2-M
			4DA2		9DY2
			4DE2		9DY3
			4DX2		9EA2
			4DX3		9EA3
			4DY2		
			4EA2-E		
			4EA2-M		

RECEIVED
MAR - 3 1997
ALASKA PUBLIC UTILITIES COMM.

GCI COMMUNICATION CORP.

ACCESS SERVICES

11. Access Service Interfaces and Transmission Specifications (Cont'd)
11.2 Special Access Service (Cont'd)
11.2.2 Network Channel Interface (NCI) Codes (Cont'd)
(C) Compatible Network Channel Interfaces (Cont'd)
(1) Voice Grade (Cont'd)

Compatible CIs		Compatible CIs		Compatible CIs	
4DX2	2DY2	4DX2	8EB2-E	4DX3	6DY2
	2LA2		8EB2-M		6DY3
	2LB2		9DY2		6EA2-E
	2LC2		9DY3		6EA2-M
	2LO3		9EA2		6EB2-E
	2LS2		9EA3		6EB2-M
	2LS3				6LS2
	2RV2-T	4DX3	2DY2		8EB2-E
	4DX2		2LA2		8EB2-M
	4DY2		2LB2		9DY2
	4EA2-E		2LC2		9DY3
	4EA2-M		2LO3		9EA2
	4LS2		2LS2		9EA3
	4RV2-T		2LS3		
	4SF2		2RV2-T	4DY2	2DY2
	4SF3		4DX2		4DY2
	6DY2		4DX3		
	6DY3		4DY2		
	6EA2-E		4EA2-E		
	6EA2-M		4EA2-M		
	6EB2-E		4LS2		
	6EB2-M		4RV2-T		
	6LS2		4SF2		
			4SF3		

RECEIVED
MAR - 3 1997
ALASKA PUBLIC UTILITIES COMM.

GCI COMMUNICATION CORP.

ACCESS SERVICES

11. Access Service Interfaces and Transmission Specifications (Cont'd)
    11.2 Special Access Service (Cont'd)
        11.2.2 Network Channel Interface (NCI) Codes (Cont'd)
            (C) Compatible Network Channel Interfaces (Cont'd)
                (1) Voice Grade (Cont'd)

Compatible CIs		Compatible CIs		Compatible Cis	
4EA2-E	2DY2	4EA3-E	2DY2	4GO2	2GO2
	4DY2		4DY2		2GO3
	4EA2-E		4EA2-E		2GS2
	4EA2-M		4EA2-M		2GS3
	4SF2		4SF2		4GS2
	6DY2		6DY2		4SF2
	6DY3		6DY3		6GS2
	6EB2-E		6EA2-E		
	6EB2-M		6EA2-M	4GO3	2GO2
	8EB2-E		6EB2-E		2GS2
	8EB2-M		6EB2-M		2GS3
	9DY2		8EB2-E		4GS2
	9DY3		8EB2-M		4SF2
			9DY2		6GS2
4EA2-M	2DY2		9DY3		
	4DY2		9EA2		
	4EA2-M		9EA3	4GS	2GS
	4SF2				2LS
	6DY2				4GS
	6DY3				4LS
	6EB2-E				
	6EB2-M				
	8EB2-E				
	8EB2-M				
	9DY2				
	9DY3				

RECEIVED
MAR -3 1997
ALASKA PUBLIC UTILITIES COMM.

GCI COMMUNICATION CORP.

ACCESS SERVICES

11. Access Service Interfaces and Transmission Specifications (Cont'd)
11.2 Special Access Service (Cont'd)
11.2.2 Network Channel Interface (NCI) Codes (Cont'd)
(C) Compatible Network Channel Interfaces (Cont'd)
(1) Voice Grade (Cont'd)

Compatible CIs		Compatible CIs		Compatible Cis	
4LO2	2LS2	4LS3	2LA2	4SF2	2LO3
	2LS3		2LB2		2LR2
	4LS2		2LC2		2LS2
	4SF2		2LO2		2LS3
	6LS2		2LO3		2RV2-T
			4SF2		4AC2
4LO3	2LS2				4DY2
	2LS3	4NO2	2DA2		4LS2
	4LS2		2DE2		4RV2-T
	4SF2		2NO2		4SF2
	6LS2		4DA2		6DY2
			4DE2		6DY3
4LR2	2LR2		4NO2		6GS2
	4LR2		6DA2		9DY2
	4SF2				9DY3
		4RV2-O	2RV2-T		
4LR3	2LR2		4RV2-T	4SF3	2DY2
	4LR2		4SF2		2GO3
	4SF2				2GS2
					2GS3
4LS	2GS	4SF2	2AC2		2LA2
	2LS		2DY2		2LB2
	4GS		2GS2		2LC2
	4LS		2GS3		2LO3
			2LA2		2LR2
4LS2	2LA2		2LB2		
	2LB2		2LC2		
	2LC2				
	2LO2				
	2LO3				

RECEIVED
MAR -3 1997
ALASKA PUBLIC UTILITIES COMM.

ACCESS SERVICES

11. Access Service Interfaces and Transmission Specifications (Cont'd)
    11.2 Special Access Service (Cont'd)
        11.2.2 Network Channel Interface (NCI) Codes (Cont'd)
            (C) Compatible Network Channel Interfaces (Cont'd)
                (1) Voice Grade (Cont'd)

Compatible CIs		Compatible CIs		Compatible Cis	
4SF3	2LS2	6DA	4DA2	6DY3	2DY2
	2LS3		6DA2		4DY2
	2RV2-T				6DY2
	4DY2	6DX2	2DY2		6DY3
	4EA2-E		4DY2		
	4EA2-M		4EA2-E	6EA2-E	2AC2
	4GS2				
	4LR2		4EA2-M		2DY2
	4LS2		4SF2		2LA2
	4RV2-T		6DY2		2LB2
	4SF2		6DY3		2LC2
	4SF3		6EA2-E		2LO3
	6DY2		6EA2-M		2LS2
	6DY3		6EB2-E		2LS3
	6EB2-E		6EB2-M		2RV2-T
	6EB2-M		8EB2-E		4AC2
	6GS2		8EB2-M		4DY2
	6LS2		9DY2		4EA2-E
	9DY2		9DY3		4EA2-M
	9DY3		9EA2		4LS2
	9EA2		9EA3		4RV2-T
	9EA3				4SF2
		6DY2	2DY2		4SF3
4TF2	2TF2		4DY2		6DY2
	4TF2		6DY2		6DY3
					6EA2-E
					6EA2-M

RECEIVED
MAR - 3 1997
ALASKA PUBLIC UTILITIES COMM.

ACCESS SERVICES

11. Access Service Interfaces and Transmission Specifications (Cont'd)
    11.2 Special Access Service (Cont'd)
        11.2.2 Network Channel Interface (NCI) Codes (Cont'd)
            (C) Compatible Network Channel Interfaces (Cont'd)
                (1) Voice Grade (Cont'd)

Compatible CIs		Compatible CIs		Compatible Cis	
6EA2-E	6EB2-E	6EA2-M	6DY2	6EB-3E	2DY2
	6EB2-M		6DY3		4DY2
	6LS2		6EA2-M		4EA2-E
	8EB2-E		6EB2-E		4EA2-M
	8EB2-M		6EB2-M		4SF2
	9DY2		6LS2		6DY2
	9DY3		8EB2-E		6DY3
			8EB2-M		6EA2-E
6EA2-M	2AC2		9DY2		6EA2-M
	2DY2		9DY3		8EB2-E
	2LA2				8EB2-M
	2LB2	6EB2-E	2DY2		9DY2
	2LC2		4DY2		9DY3
	2LO3		4SF2		9EA2
	2LS2		6DY2		9EA3
	2LS3		6DY3		
	2RV2-T		6EB2-E	6EX2-A	2GS2
	4AC2		6EB2-M		2GS3
	4DY2		9DY2		2LS2
	4EA2-E		9DY3		2LS3
	4EA2-M				4GS2
	4RLS2	6EB2-M	SDY2		4LS2
	4RV2-T		4DY2		4SF2
	4SF2		4SF2		6GS2
	4SF3		6DY2		6LS2
			6DY3		
			6EB2-M		
			9DY2		
			9DY3		

RECEIVED
MAR - 3 1997
ALASKA PUBLIC UTILITIES COMM.

GCI COMMUNICATION CORP.

ACCESS SERVICES

11. Access Service Interfaces and Transmission Specifications (Cont'd)
11.2 Special Access Service (Cont'd)
11.2.2 Network Channel Interface (NCI) Codes (Cont'd)
(C) Compatible Network Channel Interfaces (Cont'd)
(1) Voice Grade (Cont'd)

Compatible CIs		Compatible CIs		Compatible Cis	
6EX2-B	2GO3	8EB2-E	2AC2	8EB2-M	2AC2
	2LA2		2DY2		2DY2
	2LB2		2LA2		2LA2
	2LC2		2LB2		2LB2
	2LO2		2LC2		2LC2
	2LO3		2LO3		2LO3
	2LR2		2LS2		2LS2
	4LR2		2LS3		2LS3
	4SF2		2RV2-T		2RV2-T
			4AC2		4AC2
6GO2	2GO2		4DY2		4DY2
	2GS2		4LS2		4LS2
	2GS3		4RV2-T		4RV2-T
	4GS2		4SF2		4SF2
	4SF2		4SF3		4SF3
	6GS2		6DY2		6DY2
			6DY3		6DY3
6LO2	2LS2		6EB2-E		6EB2-E
	2LS3		6EB2-M		6BE2-M
	4LS2		6LS2		6LS2
	4SF2		8EB2-E		8EB2-M
	6LS2		8EB2-M		9DY2
			9DY2		9DY3
6LS2	2LA2		9DY3		
	2LB2				
	2LC2				
	2LO2				
	2LO3				
	4SF2				

RECEIVED
MAR - 3 1997
ALASKA PUBLIC UTILITIES COMM.

GCI COMMUNICATION CORP.

ACCESS SERVICES

11. Access Service Interfaces and Transmission Specifications (Cont'd)
11.2 Special Access Service (Cont'd)
11.2.2 Network Channel Interface (NCI) Codes (Cont'd)
(C) Compatible Network Channel Interfaces (Cont'd)
(1) Voice Grade (Cont'd)

Compatible CIs		Compatible CIs		Compatible Cis	
8EC2	2DY2	9DY2	2DY2	9EA3	2DY2
	4DY2		4DY2		4DY2
	4EA2-E		6DY2		4EA2-E
	4EA2-M		6DY3		4EA2-M
	4SF2		9DY2		6DY2
	6DY2				6DY3
	6DY3	9DY3	2DY2		6EA2-E
	6EA2-E		4DY2		6EA2-M
	6EA2-M		6DY2		6EB2-E
	6EB2-E		6DY3		6EB2-M
	6EB2-M		9DY2		8EB2-E
	8EB2-E		9DY3		8EB2-M
	8EB2-M				9DY2
	9DY2	9EA2	2DY2		9DY3
	9DY3		4DY2		9EA3
	9EA2		4EA2-E		
	9EA3		4EA2-M		
			6DY2		
			6DY3		
			6EA2-E		
			6EA2-M		
			6EB2-E		
			6EB2-M		
			8EB2-E		
			8EB2-M		
			9DY2		
			9DY3		
			9EA2		
			9EA3		

RECEIVED
MAR - 3 1997
ALASKA PUBLIC UTILITIES COMM.

GCI COMMUNICATION CORP.

ACCESS SERVICES

11. Access Service Interfaces and Transmission Specifications (Cont'd)
    11.2 Special Access Service (Cont'd)
        11.2.2 Network Channel Interface (NCI) Codes (Cont'd)
            (C) Compatible Network Channel Interfaces (Cont'd)

(2) Program Audio

Compatible CIs		Compatible CIs	
2PG2-1	2PG1-1	4DS8-15E	2PG1-3
	2PG2-1		2PG2-3
2PG2-3	2PG1-3	4DS8-15F	2PG1-5
	2PG2-3		2PG2-5
2PG2-5	2PG1-5	4DS8-15G	2PG1-8
	2PG2-5		2PG2-8
2PG2-8	2PG1-8	4DA8-15H	2PG1-1
	2PG2-8		2PG2-1

(3) Video

Compatible CIs		Compatible CIs	
2TV6-1	4TV6-15	4TV7-5	4TV6-5
	4TV7-15		4TV7-5
2TV6-2	6TV6-15	4TV7-15	4TV6-15
	6TV7-15		4TV7-15
2TV7-1	4TV6-15	6TV6-5	6TV6-5
	4TV7-15		6TV7-5
2TV7-2	6TV6-15	6TV6-15	6TV6-15
	6TV7-15		6TV7-15
4TV6-5	4TV6-5	6TV7-5	6TV6-5
	4TV7-5		6TV7-5
4TV6-15	4TV6-15	6TV7-15	6TV6-15
	4TV7-15		6TV7-15

RECEIVED
MAR - 3 1997
ALASKA PUBLIC UTILITIES COMM.

GCI COMMUNICATION CORP.

ACCESS SERVICES

11. Access Service Interfaces and Transmission Specifications (Cont'd)
    11.2 Special Access Service (Cont'd)
        11.2.2 Network Channel Interface (NCI) Codes (Cont'd)
            (C) Compatible Network Channel Interfaces (Cont'd)

(4) Digital Data

Compatible CIs		Compatible CIs		Compatible Cis	
4DS8-15	4DS8-15+	4DU5-24	4DU5-24	6DU5-24	6DU5-24
	4DU5-24				
	4DU5-48	4DU5-48	4DU5-48	6DU5-48	6DU5-48
	4DU5-56				
	4DU5-96	4DU5-96	4DU5-96	6DU5-56	6DU5-56
	6DU5-24				
	6DU5-48				
	6DU5-96	4DU8-56	4DU5-56	6DU5-96	6DU5-96

+ Available only as a cross connect of two digital channels at appropriate digital speeds at a Company hub.

(5) High Capacity

Compatible CIs		Compatible CIs	
4DSO-63	4DSO-63	4DS8-15J	4DU8-A
	4DU8-A, B or C		6DU8-A
	6DU8-A, B or C		
		4DS8-15K	4DU8-B
4DS6-27	4DS6-27		4DU8-C
	4DU8-A, B or C		6DU8-B
	6DU8-A, B or C		6DU8-C
4DS6-44	4DS6-44	4DS8-31	4DS8-31
	4DU8-A, B or C		4DU8-A, B or C
	6DU8-A, B or C		6DU8-A, B or C
4DS8-15	4DS8-15+	4DU8-A, B or C	
	4DU8-B		4DU8-A, B or C
	6DU8-8		

+ Available only as a cross connect of two individual channels of 1.544 Mbps facilities at a Company hub.

RECEIVED
MAR - 3 1997
ALASKA PUBLIC UTILITIES COMM.

GCI COMMUNICATION CORP.

ACCESS SERVICES

12. RESERVED FOR FUTURE USE

RECEIVED
DEC 21 2018
STATE OF ALASKA
REGULATORY COMMISSION OF ALASKA

GCI COMMUNICATION CORP.

ACCESS SERVICES

13. Rates and Charges - Anchorage

13.1 Line Charges

a. Carrier Common Line (CCL) Rate

This charge is billed to AUSAC as described in section 3.7 preceding. (N) (D)

b. Network Access Fee (NAF) Rate

The total RCA NAF Rate is $3.69 per line per month.

RECEIVED
JUL 27 2017
STATE OF ALASKA
REGULATORY COMMISSION OF ALASKA

GCI COMMUNICATION CORP.

ACCESS SERVICES

13. Rates and Charges – Anchorage (Cont'd)

13.2 Switched Access Service

13.2.1 Nonrecurring Charges

	Rate	Reference	
(A) Access Order	$29.59	5.2	
(B) Service Date Change Charge	$13.76	5.8	
(C) Design Change Charge	$13.76	5.8	
(D) Miscellaneous Service Order Charge	$13.76	5.8	
(E) Entrance Facility – Installation DS1	$158.48		
Entrance Facility – Installation DS3	$474.14		
Direct Trunk Transport Activation	$16.22		(R)
(F) Interim NXX Translation Per Order	$40.50	6.8	
(G) Telecommunications Service Priority Charge Per Circuit	$55.00	9.3	

RECEIVED
JUN 29 2022
STATE OF ALASKA
REGULATORY COMMISSION OF ALASKA

GCI COMMUNICATION CORP.

ACCESS SERVICES

13. Rates and Charges – Anchorage (Cont'd)
    13.2 Switched Access Service
        13.2.2 Recurring Charges

		Rate	Reference	
(A)	Common Transport Per Minutes of Use – Orig Toll	$0.004440	6.8	
	Tandem Switched Transport Termination – Terminating to 3rd Party	$0.001657		
	Tandem Switched Transport Facility – Terminating To 3rd Party	$0.000436		
	Tandem Switching- Terminating to 3rd Party	$0.038894 (I)		
	Tandem Switched Transport Termination – Terminating to end office	$0.00		
	Tandem Switched Transport Facility – Terminating To End Office	$0.00		
	Tandem Switching- Terminating to End Office	$0.00		
	Joint Tandem Switched Transport – Orig Toll Free	$0.001		
(B)	Entrance Facility – DS1*	$48.95		
	Entrance Facility – DS3*	$721.14		
	Direct Trunked Transport Termination – DS1	$37.88		
	Direct Trunked Transport Termination – DS3	$182.02		
	Direct Trunked Transport Facility – DS1	$9.74		
	Direct Trunked Transport Facility – DS3	$93.51		
	Multiplexing DS3 to DS1	$216.02		
	Multiplexing DS1 to Voice	$209.05		
(C)	Local Switching Per Minutes of Use – Originating Toll	$0.007454	6.8	
	Local Switching Per Minutes of Use - Originating Toll Free	$0.001868	6.8	(R)
(D)	Information Surcharge Per 100 Minutes – Orig Toll	$0.024761	6.8	
	Information Surcharge Per 100 Minutes – Originating Toll Free	$0.00	6.8	

*The Entrance Facility charges specified in Section 6.2 of this tariff will not apply when: 1) the customer designated premises and the serving wire center are physically (including caged, cageless, shared and adjacent arrangements) or virtually collocated as those terms are used in 47 CFR 51.323, and 2) the customer obtains collocation for the purpose of interconnection with the Telephone Company's network for the transmission and routing of telephone exchange service, exchange access or both, and for the purpose of providing local exchange access services to its customers.

RECEIVED
JUN 29 2022
STATE OF ALASKA
REGULATORY COMMISSION OF ALASKA

GCI COMMUNICATION CORP.

ACCESS SERVICES

13. Rates and Charges – Anchorage (Cont'd)
13.2 Switched Access Service (Cont'd)
13.2.2 Recurring Charges (Cont'd)

	Rate	Reference	
(E) TSP Database Charge Per Circuit	$1.00	9.3	
(F) Toll Free Database Access Service Queries	$0.002224	6.8	(R)
13.2.3 Equal Access Recovery Charge Monthly Rate per Presubscribed Equal Access Line	$0.045833	6.8	
13.2.4 Presubscription Change Charge Per Telephone Exchange Service Line or Trunk	$5.00	9.3	

13.2.5 Assumed Minutes of Use	Assumed Minutes Per Month	Tariff Section Reference
(A) Feature Group A, Two Way Calling (1510 Originating, 2685 Terminating)	4195	6.8
(B) Feature Group A, Originating Only	1510	6.8
(C) Feature Group A, Terminating Only	2685	6.8
(D) Feature Group B, Two Way Calling (3132 Originating, 5568 Terminating)	8700	6.8
(E) Feature Group B, Originating Only	3132	6.8
(F) Feature Group B, Terminating Only	5568	6.8

RECEIVED
JUN 29 2004
State of Alaska
Regulatory Commission of Alaska

GCI COMMUNICATION CORP.

ACCESS SERVICES

13. Rates and Charges – Anchorage (Cont'd) (T)

13.3 Special Access Service

Regulations concerning charges associated with Surcharge for Special Access Service are set forth in 7.3 preceding.

13.3.1a Surcharge Monthly Rate	$25.00		
13.3.1b Telecommunications Service Priority Charge Regulations concerning charges associated with Surcharge for Miscellaneous Service are set forth in 9.3 preceding.	Monthly $1.00	NRC $55.00	
13.3.1c Special Access Ordering Regulations concerning charges associated with Access Ordering are set forth in 5.2 and 5.8 preceding			
(A) Access Order Charge Per Order	$90.85		(I)
(B) Service Date Change Charge Service Date Change Charge will apply, on a per order per occurrence basis, for each service date changed. The Access Order Charge as specified in 13.3.1c(A) preceding does not apply.	$42.15		(I)
(C) Design Change Charge The Design Change Charge will apply on a per order per occurrence basis, for each order requiring design change.	$42.15		(I)
(D) Miscellaneous Service Order Charge	$42.15		(I)

Issued by: GCI Communication Corp.

By: Jennifer K.G. Robertson Title: Tariffs and Licenses Manager

RECEIVED
JUN 10 2011
STATE OF ALASKA
REGULATORY COMMISSION OF ALASKA

GCI COMMUNICATION CORP.

ACCESS SERVICES

13. Rates and Charges – Anchorage (Cont'd)
13.3 Special Access Service (Cont'd)

13.3.2 Voice Grade Service
Regulations concerning Voice Grade are set forth in 7.4 preceding.

(T)

(A) Channel Termination Per Termination*	Monthly Rate	NRC
Two-Wire	$49.10	$208.00
Four-Wire	$95.70	$208.00

(B) Channel Mileage

(1) Channel Mileage Facility per Mile

Two-Wire	$6.80
Four-Wire	$6.80

(2) Channel Mileage Termination per Term

Two-Wire	$136.30
Four-Wire	$136.30

(L)

*The Channel Termination Charge Specified in Section 7.2.1(A) of this tariff will not apply when: 1) the customer designated premises and the serving wire center are physically (including caged, cageless, shared and adjacent arrangements) or virtually collocated as those terms are used in 47 CFR 51.323, and (2) the customer obtains collocation for the purpose of interconnection with the Telephone Company's network for the transmission and routing of telephone exchange service, exchange access or both, and for the purpose of providing local exchange or exchange access service to its customers. (N) (N) (L)

(L) Matter relocated to Original Sheet 220.1

Tariff Advice No. 552-489 Effective: July 25, 2011

Issued by: GCI Communication Corp.
By: Cynthia L. Lynch Title: Tariffs and Licenses Manager

RECEIVED
JUN 10 2011
STATE OF ALASKA
REGULATORY COMMISSION OF ALASKA

GCI COMMUNICATION CORP.

ACCESS SERVICES

13. Rates and Charges – Anchorage (Cont'd)
13.3 Special Access Service (Cont'd)

13.3.2 Voice Grade Service (L)
Regulations concerning Voice Grade are set forth in 7.4 preceding.

(C) Optional Features and Functions

(1) Voice Bridging per Port

Two-Wire	$5.30
Four-Wire	$9.10

(2) Conditioning per Termination

- C-Type	$9.70
- Improved Attenuation Distortion	$0.00
- Improved Envelope Delay Distortion	$0.00
- Data Capability	$9.70
- Sealing Current	$0.00

(3) Improved Return Loss per Termination

- Effective Two-Wire	$9.70
- Effective Four-Wire	$9.70 (L)

(L) Matter relocated from 4th Revised sheet 220

Tariff Advice No. 552-489 Effective: July 25, 2011

Issued by: GCI Communication Corp.
By: Cynthia L. Lynch Title: Tariffs and Licenses Manager

RECEIVED
JUN 10 2011
STATE OF ALASKA
REGULATORY COMMISSION OF ALASKA

GCI COMMUNICATION CORP.

ACCESS SERVICES

13. Rates and Charges – Anchorage (Cont'd)
13.3 Special Access Service (Cont'd)
13.3.2 Voice Grade Service (Cont'd)
(C) Optional Features and Functions (Cont'd)

	Monthly Rate	NRC
(4) Customer Specified Receive Level per Two-Wire Termination	$0.00	
(5) Signaling Capability per Termination	$32.80	

13.3.3 Digital Data Service

Regulations concerning Digital Data Service are set forth in 7.5 preceding.

(A) Channel Termination per Termination* (T)

	Monthly Rate	NRC
- 2.4 kbps	$144.00	$292.00
- 4.8 kbps	$67.13	$292.00
- 9.6 kbps	$67.13	$292.00
- 19.2 kbps	$67.13	$292.00
- 56.0 kbps	$67.13	$292.00
- 64.0 kbps	$67.13	$292.00

(L)

* The Channel Termination Charge Specified in Section 7.2.1(A) of this tariff will not apply when: 1) the customer designated premises and the serving wire center are physically (including caged, cageless, shared and adjacent arrangements) or virtually collocated as those terms are used in 47 CFR 51.323, and (2) the customer obtains collocation for the purpose of interconnection with the Telephone Company's network for the transmission and routing of telephone exchange service, exchange access or both, and for the purpose of providing local exchange or exchange access service to its customers. (N) (N) (L)

(L) Matter relocated to Original Sheet 221.1

Tariff Advice No. 552-489 Effective: July 25, 2011

Issued by: GCI Communication Corp.
By: Cynthia L. Lynch Title: Tariffs and Licenses Manager

RCA No. 489 Original Sheet No. 221.1

Canceling

Sheet No.

RECEIVED
JUN 10 2011
STATE OF ALASKA
REGULATORY COMMISSION OF ALASKA

GCI COMMUNICATION CORP.

ACCESS SERVICES

13. Rates and Charges – Anchorage (Cont'd)
13.3 Special Access Service (Cont'd)
13.3.3 Digital Data Service (Cont'd) (L)

(B) Channel Mileage

(1) Channel Mileage Facility per Mile per Month		(2) Channel Mileage Facility Termination per Month	
- 2.4 kbps	$6.80	- 2.4 kbps	$136.30
- 4.8 kbps	$6.80	- 4.8 kbps	$13.98
- 9.6 kbps	$6.80	- 9.6 kbps	$13.98
- 19.2 kbps	$8.20	- 19.2 kbps	$164.90
- 56.0 kbps	$13.60	- 56.0 kbps	$272.50
- 64.0 kbps	$14.80	- 64.0 kbps	$295.70

(C) Optional Features and Functions	Per Month	
(1) Bridging per port	$9.70	(L)

(L) Matter Relocated from 4th Revised Sheet 221

Tariff Advice No. 552-489 Effective: July 25, 2011

Issued by: GCI Communication Corp.

By: Cynthia L. Lynch Title: Tariffs and Licenses Manager

RECEIVED
JUN 10 2011
STATE OF ALASKA
REGULATORY COMMISSION OF ALASKA

GCI COMMUNICATION CORP.

ACCESS SERVICES

13. Rates and Charges – Anchorage (Cont'd)
13.3 Special Access Service (Cont'd)

13.3.4 High Capacity Service

Regulations concerning High Capacity Service are set forth in 7.6 preceding.

(A) Channel Termination per Termination*	Monthly Rate	NRC	(T)
- 1.544 Mbps	$142.22	$474.00	
- 3.152 Mbps	ICB	ICB	
- 6.312 Mbps	ICB	ICB	
- 44.736 Mbps	$1,359.34	$946.00	
- 274.175 Mbps	ICB	ICB	

(B) Channel Mileage

(1) Channel Mileage Facility per Mile	
- 1.544 Mbps	$139.10
- 3.152 Mbps	ICB
- 6.312 Mbps	ICB
- 44.736 Mbps	$298.06
- 274.175 Mbps	ICB

(2) Channel Mileage Termination per Termination	
- 1.544 Mbps	$272.50
- 3.152 Mbps	ICB
- 6.312 Mbps	ICB
- 44.736 Mbps	$526.20
- 274.175 Mbps	ICB

* The Channel Termination Charge Specified in Section 7.2.1(A) of this tariff will not apply when: 1) the customer designated premises and the serving wire center are physically (including caged, cageless, shared and adjacent arrangements) or virtually collocated as those terms are used in 47 CFR 51.323, and (2) the customer obtains collocation for the purpose of interconnection with the Telephone Company's network for the transmission and routing of telephone exchange service, exchange access or both, and for the purpose of providing local exchange or exchange access service to its customers. (N) (N)

Tariff Advice No. 552-489 Effective: July 25, 2011

Issued by: GCI Communication Corp.
By: Cynthia L. Lynch Title: Tariffs and Licenses Manager

RECEIVED
JUN 29 2004
State of Alaska
Regulatory Commission of Alaska

GCI COMMUNICATION CORP.

ACCESS SERVICES

13. Rates and Charges – Anchorage (Cont'd) (T)

13.3 Special Access Service (Cont'd)

13.3.4 High Capacity Service (Cont'd)

0

(C) Optional Features and Functions

(1) Multiplexing, per arrangement		NRC	
- DS4 to DS1	ICB***		
- DS3 to DS1	ICB***		
- DS2 to DS1	ICB***		
- DS1C to DS1	ICB***		
- DS1 to Voice*	$583.50		(I)
- DS1 to DS0	$160.00	$203.52	(I / N)
- DS0 to twenty (20) 2.4 kbps	$670.30		
- DS0 to ten (10) 4.8 kbps	$366.90		
- DS0 to five (5) 9.6 kbps	$213.90		
(2) Automatic Loop Transfer per arrangement**	$40.60		(I)

13.4 Additional Engineering, Additional Labor and Miscellaneous Service

Regulations Concerning Additional Engineering, Additional labor and Miscellaneous Services are set forth in 9 preceding.

13.4.1 The Charges for Additional Engineering:

(A) Basic Time, normally scheduled working hours per engineer (each half hour or fraction thereof)	$40.20	(R)
(B) Overtime, outside of normally scheduled working hours per engineer (each half hour or fraction thereof)	$60.30	(R)

* A channel of this DS1 to the Hub can be used for Digital Data service.
** An additional Channel Termination charge will apply whenever the spare line is provided as a leg to the customer designated premises.
*** All ICB rate elements are in the Additional Engineering section and tariffed equipment rate sections.

Tariff Advice No. 275 Effective: August 13, 2004

Issued by: GCI Communication Corp.

By: Jennifer KG Robertson Title: Tariffs and Licenses Manager

RECEIVED
JUN 29 2004
State of Alaska
Regulatory Commission of Alaska

GCI COMMUNICATION CORP.

ACCESS SERVICES

13. Rates and Charges – Anchorage (Cont'd) (T)

13.4 Additional Engineering, Additional Labor and Miscellaneous Service (Cont'd)

13.4.1 The Charges for Additional Engineering (Cont'd)

(C) Premium Time, outside of scheduled work day per engineer (each half hour or fraction thereof) $80.40 (R)

13.4.2 The charges for Additional Labor:

(A) Installation and Repair

(1) Overtime, outside of normally scheduled working hours on a scheduled work day, per technician (each half hour or fraction thereof*) $61.50 (R)

(2) Premium Time, outside of normally scheduled working day, per technician (each half hour or fraction thereof*) $82.05 (R)

(B) Standby

(1) Basic Time, normally scheduled working hours, per technician (each half hour or fraction thereof*) $42.40 (I)

(2) Overtime, outside of normally scheduled working hours on a scheduled work day, per technician (each half hour or fraction thereof*) $63.55 (R)

(3) Premium time, outside of scheduled working day, per technician (each half hour or fraction thereof*) $84.75 (R)

*A call-out of a Company employee at a time not consecutive with the employee's scheduled working period is subject to a minimum charge of four hours.

Tariff Advice No. 274 Effective: August 13, 2004

Issued by: GCI Communication Corp.

By: Jennifer K G Robertson Title: Tariffs and Licenses Manager

RECEIVED
JUN 29 2004
State of Alaska
Regulatory Commission of Alaska

GCI COMMUNICATION CORP.

ACCESS SERVICES

13. Rates and Charges – Anchorage (Cont'd) (T)
    13.4 Additional Engineering, Additional Labor and Miscellaneous Service (Cont'd)
        13.4.2 The Charges for Additional Labor (Cont'd)

(C) Testing and Maintenance with other telephone companies, or other labor.

(1) Installation and Repair Basic Time, normally scheduled working hours, per technician (each half hour or fraction thereof*)	$41.00	(R)
Overtime, outside of normally scheduled working hours on a scheduled work day, per technician (each half hour or fraction thereof*)	$61.50	(R)
Premium Time, outside of scheduled work day per technician (each half hour of fraction thereof*)	$82.05	(R)
(2) Central Office Maintenance Basic Time normally scheduled working hours, per technician (each half hour or fraction thereof*)	$41.60	(R)
Overtime, outside of normally scheduled working hours on a scheduled work day, per technician (each half hour or fraction thereof*)	$62.45	(R)
Premium Time, outside of scheduled work day per technician (each half hour of fraction thereof*)	$83.30	(R)

*A call-out of a Company employee at a time not consecutive with the employee's scheduled working period is subject to a minimum charge of four hours.

RECEIVED
DEC 21 2018
STATE OF ALASKA
REGULATORY COMMISSION OF ALASKA

GCI COMMUNICATION CORP.

ACCESS SERVICES

14. Rates and Charges - Fairbanks

14.1 Line Charges

a. Carrier Common Line (CCL) Rate

This charge is billed to AUSAC as described in section 3.7 preceding. (N) (D)

b. Network Access Fee (NAF) Rate

The total RCA NAF Rate is $5.75 per line per month.

RECEIVED
JUL 27 2017
STATE OF ALASKA
REGULATORY COMMISSION OF ALASKA

GCI COMMUNICATION CORP.

ACCESS SERVICES

14. Rates and Charges – Fairbanks (Cont'd)

14.2 Switched Access Service

14.2.1 Nonrecurring Charges

	Rate	Reference	
(A) Access Order	$21.74	5.2	
(B) Service Date Change Charge	$9.86	5.8	
(C) Design Change Charge	$9.86	5.8	
(D) Miscellaneous Service Order Charge	$9.86	5.8	
(E) Entrance Facility – DS1	$169.45		
Entrance Facility – DS3	$190.99		
Direct Trunk Transport Activation	$183.11		(R)
(F) Interim NXX Translation Per Order	$40.50	6.8	
(G) Telecommunications Service Priority Charge Per Circuit	$55.00	9.3	

RECEIVED
JUN 29 2022
STATE OF ALASKA
REGULATORY COMMISSION OF ALASKA

GCI COMMUNICATION CORP.

ACCESS SERVICES

14. Rates and Charges – Fairbanks (Cont'd)

14.2 Switched Access Service

14.2.2 Recurring Charges

		Rate	Reference	
(A)	Entrance Facility – DS1*	$104.68		
	Entrance Facility – DS3*	$944.07		
	Direct Trunk Transport Termination– DS1	$29.32		
	Direct Trunk Transport Termination – DS3	$181.48		
	Direct Trunk Transport Facility – DS1	$5.65		
	Direct Trunk Transport Facility – DS3	$47.45		
	Multiplexing – DS3 to DS1	$214.08		
	Multiplexing – DS1 to Voice	$82.65		
(B)	Local Switching Per Minutes of Use – Originating Toll	$0.007427	6.8	
	Local Switching Per Minutes of Use – Originating Toll Free	$0.001017	6.8	(R)
(C)	Information Surcharge Per 100 Minutes – Orig Toll	$0.0025872	6.8	
	Information Surcharge Per 100 Minutes - Originating Toll Free	$0.00	6.8	
(D)	TSP Database Charge Per Circuit	$1.00	9.3	
(F)	Toll Free Database Access Service Queries	$0.002224	6.8	(R)

*The Entrance Facility charges specified in Section 6.2 of this tariff will not apply when: 1) the customer designated premises and the serving wire center are physically (including caged, cageless, shared and adjacent arrangements) or virtually collocated as those terms are used in 47 CFR 51.323, and 2) the customer obtains collocation for the purpose of interconnection with the Telephone Company's network for the transmission and routing of telephone exchange service, exchange access or both, and for the purpose of providing local exchange access services to its customers.

RECEIVED
JUN 2 4 2003
State of Alaska
Regulatory Commission of Alaska

GCI COMMUNICATION CORP.

ACCESS SERVICES

14. Rates and Charges - Fairbanks (Cont'd)
14.2 Switched Access Service (Cont'd)

	Rate	Reference	
14.2.3 Equal Access Recovery Charge Monthly Rate per Presubscribed Equal Access Line	$0.102390	6.8	(R)
14.2.4 Presubscription Change Charge Per Telephone Exchange Service Line or Trunk	$5.00	9.3	

14.2.5 Assumed Minutes of Use	Assumed Minutes Per Month	Tariff Section Reference
(A) Feature Group A, Two Way Calling (1510 Originating, 2685 Terminating)	4195	6.8
(B) Feature Group A, Originating Only	1510	6.8
(C) Feature Group A, Terminating Only	2685	6.8
(D) Feature Group B, Two Way Calling (3132 Originating, 5568 Terminating)	8700	6.8
(E) Feature Group B, Originating Only	3132	6.8
(F) Feature Group B, Terminating Only	5568	6.8

RECEIVED
MAY 18 2001
State of Alaska
Regulatory Commission of Alaska

GCI COMMUNICATION CORP.

ACCESS SERVICES

14. Rates and Charges - Fairbanks (Cont'd)

14.3 Special Access Service

Regulations concerning charges associated with Surcharge for Special Access Service are set forth in 7.3 preceding.

14.3.1a Surcharge Monthly Rate $25.00

14.3.1b Telecommunications Service Priority Charge
Regulations concerning charges associated with Surcharge for Miscellaneous Service are set forth in 9.3 preceding.

	Monthly	NRC
	$1.00	$55.00

14.3.1c Special Access Ordering
Regulations concerning charges associated with Access Ordering are set forth in 5.2 and 5.8 preceding

(A) Access Order Charge Per Order $82.00

(B) Service Date Change Charge $35.00
Service Date Change Charge will apply, on a per order per occurrence basis, for each service date changed. The Access Order Charge as specified in 14.3.1c(A)preceding does not apply.

(C) Design Change Charge $35.00
The Design Change Charge will apply on a per order per occurrence basis, for each order requiring design change.

(D) Miscellaneous Service Order Charge $35.00

RECEIVED
JUN 10 2011
STATE OF ALASKA
REGULATORY COMMISSION OF ALASKA

GCI COMMUNICATION CORP.

ACCESS SERVICES

14. Rates and Charges - Fairbanks (Cont'd)
14.3 Special Access Service (Cont'd)

14.3.2 Voice Grade Service
Regulations concerning Voice Grade are set forth in 7.4 preceding.

	Monthly Rate	NRC	
(A) Channel Termination Per Termination*			(T)
Two-Wire	$38.75	$300.00	
Four-Wire	$61.74	$300.00	
(B) Channel Mileage			
(1) Channel Mileage Facility per Mile			
Two-Wire	$2.77		
Four-Wire	$2.77		
(2) Channel Mileage Termination per Term			
Two-Wire	$27.72		
Four-Wire	$27.72		

(C) Optional Features and Functions	Monthly Rate	NRC
(1) Bridging		
(A) Voice Bridging per Port		
Two-Wire	$8.68	$101.76
Four-Wire	$8.68	$101.76
(B) Data Bridging, per Port		
Two-Wire	$5.13	
Four-Wire	$5.13	
(C) Telephoto Bridging, per Port		
Two-Wire	$5.13	
Four-Wire	$5.13	

*The Channel Termination Charge Specified in Section 7.2.1(A) of this tariff will not apply when: 1) the customer designated premises and the serving wire center are physically (including caged, cageless, shared and adjacent arrangements) or virtually collocated as those terms are used in 47 CFR 51.323, and (2) the customer obtains collocation for the purpose of interconnection with the Telephone Company's network for the transmission and routing of telephone exchange service, exchange access or both, and for the purpose of providing local exchange or exchange access service to its customers. (N) (N)

Tariff Advice No. 552-489 Effective: July 25, 2011

Issued by: GCI Communication Corp.
By: Cynthia L. Lynch Title: Tariffs and Licenses Manager

RECEIVED
JUN 10 2011
STATE OF ALASKA
REGULATORY COMMISSION OF ALASKA

GCI COMMUNICATION CORP.

ACCESS SERVICES

14. Rates and Charges - Fairbanks (Cont'd)
14.3 Special Access Service (Cont'd)
14.3.2 Voice Grade Service (Cont'd)
(C) Optional Features and Functions (Cont'd)
(1) Bridging (Cont'd)

	Monthly Rate	NRC	
(D) Dataphone Select-A-Station - Addressable Arrangement, Ports Per Channel Connected			
Two-Wire	$19.81		
Four-Wire	$85.73		
(2) Conditioning per Termination			
- C-Type	$8.00	$101.76	
- Improved Attenuation Distortion	$8.00	$25.44	
- Improved Envelope Delay Distortion	$8.00	$25.44	
- Data Capability	$8.00	$152.64	
- Telephoto Capacity (VG11 & VGC)	$8.00	$203.52	
W/DST at Customer Location	$8.96	$203.52	
(3) Improved Return Loss per Termination			
- Effective Two-Wire	$0.92	$25.44	
- Effective Four-Wire	$0.92	$25.44	
(4) Customer Specified Receive Level per			(L)
Two-Wire Termination	$7.34		(L)

(L) Matter relocated from 1st Revised Sheet 232

Tariff Advice No. 552-489 Effective: July 25, 2011

Issued by: GCI Communication Corp.
By: Cynthia L. Lynch Title: Tariffs and Licenses Manager

RECEIVED
JUN 1 0 2011
STATE OF ALASKA
REGULATORY COMMISSION OF ALASKA

GCI COMMUNICATION CORP.

ACCESS SERVICES

14. Rates and Charges - Fairbanks (Cont'd)
14.3 Special Access Service (Cont'd)
14.3.2 Voice Grade Service (Cont'd)
(C) Optional Features and Functions (Cont'd)

	Monthly Rate	NRC	
(5) Signaling Capability per Termination			
(A) VG1 – Loop Start Either End	$10.45	$50.88	(L/1)
(B) VG1 – Ground Start Either End	$10.45	$50.88	(L/1)
(C) VG2 – Loop Start Closed End Only	$10.45	$50.88	
(D) VG2 – Ground Start to Centrex Station Line Only	$3.61	$50.88	
(E) VG2 – 20 hz Ringdown	$3.61	$50.88	
(F) VG3, VG7 – Loop Start	$10.45	$50.88	
(G) VG3, VG7 – E&M	$10.45	$50.88	
(H) VG8, VG9 – Loop start at Closed End	$10.45	$50.88	
(I) VG8, VG9 – E&N, SF, DX at Open End	$10.45	$50.88	
(J) VG8, VG9 – E&M, at Closed End	$10.45	$50.88	
(6) Selective Signaling Arrangement, per Arrangement	$5.42		
(7) Transfer Arrangement (Key Activated * or Dial Up **) – Per four port arrangement, including control channel termination (See Note 1 – Next Page)	$.60	$50.88	(L/2)
(8) Transfer Arrangement (Key Activated * or Dial Up **) – Per five port arrangement, including control channel termination (See Note 1)	$.60	$50.88	

* The key activated is rated as a Voice Grade Channel Termination and Channel Mileage, if applicable.
** The Dial-Up Option requires the customer to purchase the Controller Arrangement.
Note 1 - An Additional Channel Termination Charge will apply whenever a spare channel is configured as a leg to the customer designated premises. Additional channel mileage charges will also apply when the transfer arrangement is not located in the customer designated premises serving wire center. (L/2)
(L/1) Matter relocated to 1st Revised Sheet 231
(L/2) Matter relocated from 2nd Revised Sheet 233

Tariff Advice No. 552-489 Effective: July 25, 2011

Issued by: GCI Communication Corp.
By: Cynthia L. Lynch Title: Tariffs and Licenses Manager

RECEIVED
JUN 10 2011
STATE OF ALASKA
REGULATORY COMMISSION OF ALASKA

14. Rates and Charges - Fairbanks (Cont'd)
    14.3 Special Access Service (Cont'd)
        14.3.3 Digital Data Service (L)

Regulations concerning Digital Data Service are set forth in 7.5 preceding.

(A) Channel Termination per Termination*	Monthly Rate	NRC	(T)
- 2.4 kbps	$71.82	$289.13	
- 4.8 kbps	$71.82	$289.13	
- 9.6 kbps	$71.82	$289.13	
- 19.2 kbps	$71.82	$289.13	
- 56.0 kbps	$71.82	$289.13	
- 64.0 kbps	$71.82	$289.13	

(L)

*The Channel Termination Charge Specified in Section 7.2.1(A) of this tariff will not apply when: 1) the customer designated premises and the serving wire center are physically (including caged, cageless, shared and adjacent arrangements) or virtually collocated as those terms are used in 47 CFR 51.323, and (2) the customer obtains collocation for the purpose of interconnection with the Telephone Company's network for the transmission and routing of telephone exchange service, exchange access or both, and for the purpose of providing local exchange or exchange access service to its customers. (N) (N)

(L) Matter relocated to 1st Revised Sheet 232

Tariff Advice No. 552-489 Effective: July 25, 2011

Issued by: GCI Communication Corp.

By: Cynthia L. Lynch Title: Tariffs and Licenses Manager

RECEIVED
JUN 24 2003
State of Alaska
Regulatory Commission of Alaska

GCI COMMUNICATION CORP.

ACCESS SERVICES

14. Rates and Charges - Fairbanks (Cont'd)
    14.4 Special Access Service (Cont'd)
        14.3.3 Digital Data Service (Cont'd)

(B) Channel Mileage

(1) Channel Mileage Facility per Mile per Month		(2) Channel Mileage Facility Termination per Month		
- 2.4 kbps	$5.54	- 2.4 kbps	$55.44	(I)
- 4.8 kbps	$5.54	- 4.8 kbps	$55.44	
- 9.6 kbps	$5.54	- 9.6 kbps	$55.44	
- 19.2 kbps	$5.54	- 19.2 kbps	$55.44	(I)
- 56.0 kbps	$5.54	- 56.0 kbps	$55.44	(R)
- 64.0 kbps	$5.54	- 64.0 kbps	$55.44	(R)

(C) Optional Features and Functions

	Monthly Rate	NRC
(1) Bridging per port	$8.68	$101.76
(2) Loop Transfer Arrangement (Key Activated * or Dial Up **) Per four port arrangement (See Note 1)	$5.10	

* The key activated is rated as a Voice Grade Channel Termination and Channel Mileage, if applicable.

** The Dial-Up Option requires the customer to purchase the Controller Arrangement.

Note 1 - An Additional Channel Termination Charge will apply whenever a spare channel is configured as a leg to the customer designated premises. Additional channel mileage charges will also apply when the transfer arrangement is not located in the customer designated premises serving wire center.

RECEIVED
JUN 1 0 2011
STATE OF ALASKA
REGULATORY COMMISSION OF ALASKA

GCI COMMUNICATION CORP.

ACCESS SERVICES

14. Rates and Charges - Fairbanks (Cont'd)
14.3 Special Access Service (Cont'd)

14.3.4 High Capacity Service
Regulations concerning High Capacity Service are set forth in 7.6 preceding.

(T)

(A) Channel Termination per Termination*	Monthly Rate	NRC
- 1.544 Mbps	$201.80	$332.74
Per mile, over 3 miles	$23.94	
- 3.152 Mbps	ICB	ICB
- 6.312 Mbps	ICB	ICB
- 44.736 Mbps	$2,331.00	$1,100.00
Per mile, over 3 miles	$214.20	
- 274.175 Mbps	ICB	ICB

(B) Channel Mileage

(1) Channel Mileage Facility per Mile	
- 64.0 Kbps	$6.80
- 1.544 Mbps	$25.45
- 3.152 Mbps	ICB
- 6.312 Mbps	ICB
- 44.736 Mbps	$258.30
- 274.175 Mbps	ICB

(2) Channel Mileage Termination per Termination	
- 64.0 Kbps	$68.80
- 1.544 Mbps	$117.81
- 3.152 Mbps	ICB
- 6.312 Mbps	ICB
- 44.736 Mbps	$611.10
- 274.175 Mbps	ICB

*The Channel Termination Charge Specified in Section 7.2.1(A) of this tariff will not apply when: 1) the customer designated premises and the serving wire center are physically (including caged, cageless, shared and adjacent arrangements) or virtually collocated as those terms are used in 47 CFR 51.323, and (2) the customer obtains collocation for the purpose of interconnection with the Telephone Company's network for the transmission and routing of telephone exchange service, exchange access or both, and for the purpose of providing local exchange or exchange access service to its customers. (N)

RECEIVED
JUN 24 2003
State of Alaska
Regulatory Commission of Alaska

GCI COMMUNICATION CORP.

ACCESS SERVICES

14. Rates and Charges - Fairbanks (Cont'd)
    14.3 Special Access Service (Cont'd)
        14.3.4 High Capacity Service (Cont'd)

(C) Optional Features and Functions

(1) Multiplexing, per arrangement

- DS4 to DS1	ICB*****	
- DS3 to DS1	$276.89	(R)
- DS2 to DS1	ICB*****	
- DS1C to DS1	ICB*****	
- DS1 to Voice*	$167.00	
- DS1 to DS0	$105.21	(R)
- DS0 to twenty (20) 2.4 kbps	$332.16	
- DS0 to ten (10) 4.8 kbps	$240.10	
- DS0 to five (5) 9.6 kbps	$209.45	

(2) Automatic Loop Transfer per arrangement** $8.85

* A channel of this DS1 to the Hub can be used for Digital Data service.
** An additional Channel Termination charge will apply whenever the spare line is provided as a leg to the customer designated premises.

(3) Transfer Arrangement (Key Activated *** or Dial Up ****) Per Four Port Arrangement, including Control Channel Termination (See Note 1) $143.61

*** The key activated is rated as a Voice Grade Channel Termination and Channel Mileage, if applicable.
**** The Dial-Up Option requires the customer to purchase the Controller Arrangement.
***** All ICB rate elements are in the Additional Engineering section and tariffed equipment rate sections.

RECEIVED
MAY 1 8 2001
State of Alaska
Regulatory Commission of Alaska

GCI COMMUNICATION CORP.

ACCESS SERVICES

14. Rates and Charges - Fairbanks (Cont'd)

14.4 Additional Engineering, Additional Labor and Miscellaneous Service
Regulations Concerning Additional Engineering, Additional labor and Miscellaneous Services are set forth in 9 preceding.

14.4.1 The Charges for Additional Engineering:

(A) Basic Time, normally scheduled working hours per engineer (each half hour or fraction thereof)	$46.58
(B) Overtime, outside of normally scheduled working hours per engineer (each half hour or fraction thereof)	$69.87

* A channel of this DS1 to the Hub can be used for Digital Data service.

Note1:An additional Channel Termination charge will apply whenever the spare line is provided as a leg to the customer designated premises. Additional channel mileage charges will also apply when the transfer arrangement is not located in the customers designated premises serving wire center.

RECEIVED

FEB 28 2001

State of Alaska
Regulatory Commission of Alaska

GCI COMMUNICATION CORP.

ACCESS SERVICES

14. Rates and Charges - Fairbanks (Cont'd)
    14.4 Additional Engineering, Additional Labor and Miscellaneous Service (Cont'd)
        14.4.1 The Charges for Additional Engineering (Cont'd)

(C) Premium Time, outside of scheduled work day per engineer (each half hour or fraction thereof) $93.16

14.4.2 The charges for Additional Labor:

(A) Installation and Repair

(1) Overtime, outside of normally scheduled working hours on a scheduled work day, per technician (each half hour or fraction thereof*) $59.72
(2) Premium Time, outside of normally scheduled working day, per technician (each half hour or fraction thereof*) $79.62

(B) Standby

(1) Basic Time, normally scheduled working hours, per technician (each half hour or fraction thereof*) $39.81
(2) Overtime, outside of normally scheduled working hours on a scheduled work day, per technician (each half hour or fraction thereof*) $59.72

(3) Premium time, outside of scheduled working day, per technician (each half hour or fraction thereof*) $79.62

*A call-out of a Company employee at a time not consecutive with the employee's scheduled working period is subject to a minimum charge of four hours.

Tariff Advice No. 89 Effective: April 19, 2001
Pursuant to U-01-042(1)

Issued by: GCI Communication Corp.

By: Title: Director, Rates & Tariffs

RECE...
MAY 1 8 ...
State of Alaska
Regulatory Commission of Alaska

GCI COMMUNICATION CORP.

ACCESS SERVICES

14. Rates and Charges - Fairbanks (Cont'd)
    14.4 Additional Engineering, Additional Labor and Miscellaneous Service (Cont'd)
        14.4.2 The Charges for Additional Labor (Cont'd)

(C) Testing and Maintenance with other telephone companies, or other labor.

(1) Installation and Repair

Basic Time - normally scheduled working hours, per technician (each half hour or fraction thereof*) $39.81

Overtime - outside of normally scheduled working hours on a scheduled work day, per technician (each half hour or fraction thereof*) $59.72

Premium Time - outside of scheduled work day per technician (each half hour of fraction thereof*) $79.62

(2) Central Office Maintenance

Basic Time - normally scheduled working hours, per technician (each half hour or fraction thereof*) $39.81

Overtime - outside of normally scheduled working hours on a scheduled work day, per technician (each half hour or fraction thereof*) $59.72

Premium Time - outside of scheduled work day per technician (each half hour of fraction thereof*) $79.62

*A call-out of a Company employee at a time not consecutive with the employee's scheduled working period is subject to a minimum charge of four hours.

RECEIVED
DEC 21 2018
STATE OF ALASKA
REGULATORY COMMISSION OF ALASKA

GCI COMMUNICATION CORP.

ACCESS SERVICES

15. Rates and Charges – Juneau, Ft. Wainwright and Eielson AFB

	Juneau	Greatland	
15.1 Line Charges			
a. Carrier Common Line (CCL) Rate			
This charge is billed to AUSAC as described in section 3.7 preceding.			(N) (D)
b. Network Access Fee (NAF) Rate			
The total RCA NAF Rate per line per month	$5.75	$5.75	

RECEIVED
JUL 27 2017
STATE OF ALASKA
REGULATORY COMMISSION OF ALASKA

GCI COMMUNICATION CORP.

ACCESS SERVICES

15. Rates and Charges – Juneau, Ft. Wainwright and Eielson AFB (Cont'd)

15.2 Switched Access Service

15.2.1 Nonrecurring Charges

	Juneau	Greatland	
(A) Access Order	$20.55	$29.48	
(B) Service Date Change Charge	$9.32	$13.37	
(C) Design Change Charge	$9.32	$13.37	
(D) Miscellaneous Service Order Charge	$9.32	$13.37	
(E) Entrance Facility Installation – DS1	$160.11	$229.73	
Entrance Facility Installation – DS3	$168.03	$268.63	
Direct Trunk Transport Activation	$196.66	$176.50	(R)
(F) Interim NXX Translation Per Order	$40.50	$40.50	
(G) Telecommunications Service Priority Charge Per Circuit	$55.00	$55.00	

RECEIVED
JUN 29 2022
STATE OF ALASKA
REGULATORY COMMISSION OF ALASKA

GCI COMMUNICATION CORP.

ACCESS SERVICES

15. Rates and Charges – Juneau, Ft. Wainwright and Eielson AFB (Cont'd)

15.2 Switched Access Service

15.2.2 Recurring Charges

		Juneau	Greatland
(A)	Common Transport Per Minutes of Use – Orig Toll	$0.001590	$0.00
	Tandem Switched Transport Termination – Terminating To 3rd Party	$0.000897	$0.00
	Tandem Switched Transport Facility – Terminating to 3rd Party	$0.000173	$0.00
	Tandem Switching – Terminating to 3rd Party	$0.00	$0.00
	Tandem Switched Transport Termination – Terminating to End Office	$0.000	$0.00
	Tandem Switched Transport Facility – Terminating to End Office	$0.00	$0.00
	Tandem Switching – Terminating to End Office	$0.00	$0.00
	Joint Tandem Switched Transport – Orig Toll Free	$0.001	
(B)	Entrance Facility – DS1*	$82.60	$92.62
	Entrance Facility – DS3*	$730.49	$960.60
	Direct Trunk Transport Termination – DS1	$22.01	$31.58
	Direct Trunk Transport Termination – DS3	$141.35	$158.30
	Direct Trunk Transport Facility – DS1	$4.24	$6.08
	Direct Trunk Transport Facility – DS3	$36.96	$41.39
	Multiplexing – DS3 to DS1	$160.73	$180.01
	Multiplexing – DS1 to Voice	$62.05	$69.50
(C)	Local Switching Per Minutes of Use – Originating Toll	$0.007887	$.002417
	Local Switching Per Minutes of Use – Orig Toll Free	$0.002362	$.001209 (R)
(D)	Information Surcharge Per 100 Minutes – Orig Toll	$0.054903	$.018398
	Information Surcharge Per 100 Minutes – Orig Toll Free	$0.00	$0.00

*The Entrance Facility charges specified in Section 6.2 of this tariff will not apply when: 1) the customer designated premises and the serving wire center are physically (including caged, cageless, shared and adjacent arrangements) or virtually collocated as those terms are used in 47 CFR 51.323, and 2) the customer obtains collocation for the purpose of interconnection with the Telephone Company's network for the transmission and routing of telephone exchange service, exchange access or both, and for the purpose of providing local exchange access services to its customers.

RECEIVED
JUN 29 2022
STATE OF ALASKA
REGULATORY COMMISSION OF ALASKA

GCI COMMUNICATION CORP.

ACCESS SERVICES

15. Rates and Charges – Juneau, Ft. Wainwright and Eielson AFB (Cont'd)

15.2 Switched Access Service (Cont'd)

15.2.2 Recurring Charges (Cont'd)

	Juneau	Greatland
(E) TSP Database Charge Per Circuit	$1.00	$1.00
(F) Toll Free Database Access Service Queries		
Basic	$0.002224	$0.002224 (R)
Basic with Vertical Feature	$0.002224	$0.002224 (R)
15.2.3 Equal Access Recovery Charge Monthly Rate per Presubscribed Equal Access Line	$0.140064	$0.235222
15.2.4 Presubscription Change Charge Per Telephone Exchange Service Line or Trunk	$5.00	$5.00

15.2.5 Assumed Minutes of Use	Assumed Minutes Per Month	Assumed Minutes Per Month
(A) Feature Group A, Two Way Calling (1510 Originating, 2685 Terminating)	4195	4195
(B) Feature Group A, Originating Only	1510	1510
(C) Feature Group A, Terminating Only	2685	2685
(D) Feature Group B, Two Way Calling (3132 Originating, 5568 Terminating)	8700	8700
(E) Feature Group B, Originating Only	3132	3132
(F) Feature Group B, Terminating Only	5568	5568

RECEIVED
JUL 0 2 2002
State of Alaska
Regulatory Commission of Alaska

GCI COMMUNICATION CORP.

ACCESS SERVICES

15. Rates and Charges – Juneau, Ft. Wainwright and Eielson AFB (Cont'd)

15.3 Special Access Service

Regulations concerning charges associated with Surcharge for Special Access Service are set forth in 7.3 preceding.

		Juneau	Greatland	
15.3.1a Per Voice Grade Equivalent		$25.00	$25.00	(C)
15.3.1b Telecommunications Service Priority Charge Regulations concerning charges associated with Surcharge for Miscellaneous Service are set forth in 9.3 preceding.	- MRC	$1.00	$1.00	
	- NRC	$55.00	$55.00	
15.3.1c Special Access Ordering Regulations concerning charges associated with Access Ordering are set forth in 5.2 and 5.8 preceding				
(A) Access Order Charge Per Order		$82.00	$82.00	
(B) Service Date Change Charge Service Date Change Charge will apply, on a per order per occurrence basis, for each service date changed. The Access Order Charge as specified in 15.3.1c(A) preceding does not apply.		$35.00	$35.00	
(C) Design Change Charge The Design Change Charge will apply on a per order per occurrence basis, for each order requiring design change.		$35.00	$35.00	
(D) Miscellaneous Service Order Charge		$35.00	$35.00	(C)

Tariff Advice No. U-01-42 Effective: October 1, 2002

Issued by: GCI Communication Corp.

By: F. W. [illegible] Title: Director, Rates & Tariffs

RECEIVED
JUN 1 0 2011
STATE OF ALASKA
REGULATORY COMMISSION OF ALASKA

GCI COMMUNICATION CORP.

ACCESS SERVICES

15. Rates and Charges – Juneau, Ft. Wainwright and Eielson AFB (Cont'd)
15.3 Special Access Service (Cont'd)

15.3.2 Voice Grade Service
Regulations concerning Voice Grade are set forth in 7.4 preceding.

(T)

	Juneau	Greatland
(A) Channel Termination Per Termination* - MRC		
Two-Wire	$25.45	$67.50
Four-Wire	$40.72	$108.00
Channel Termination Per Termination - NRC		
Two-Wire	$56.00	$56.00
Four-Wire	$56.00	$56.00
(B) Channel Mileage - MRC		
(1) Channel Mileage Facility per Mile		
Two-Wire	$1.38	$3.65
Four-Wire	$1.38	$3.65
(2) Channel Mileage Termination per Term		
Two-Wire	$13.95	$37.00
Four-Wire	$13.95	$37.00
(B) Optional Features and Functions		
(1) Bridging - MRC		
(A) Voice Bridging per Port		
Two-Wire	$8.16	$8.16
Four-Wire	$8.16	$8.16
(B) Data Bridging, per Port		
Two-Wire	$8.16	$8.16
Four-Wire	$8.16	$8.16

*The Channel Termination Charge Specified in Section 7.2.1(A) of this tariff will not apply when: 1) the customer designated premises and the serving wire center are physically (including caged, cageless, shared and adjacent arrangements) or virtually collocated as those terms are used in 47 CFR 51.323, and (2) the customer obtains collocation for the purpose of interconnection with the Telephone Company's network for the transmission and routing of telephone exchange service, exchange access or both, and for the purpose of providing local exchange or exchange access service to its customers. (N)

(N)

Tariff Advice No. 552-489 Effective: July 25, 2011

Issued by: GCI Communication Corp.
By: Cynthia L. Lynch Title: Tariffs and Licenses Manager

RECEIVED
JUL 0 2 2002
State of Alaska
Regulatory Commission of Alaska

GCI COMMUNICATION CORP.

ACCESS SERVICES

15. Rates and Charges – Juneau, Ft. Wainwright and Eielson AFB (Cont'd)
15.3 Special Access Service (Cont'd)
15.3.2 Voice Grade Service (Cont'd)

	Juneau	Greatland	
(C) Optional Features and Functions			(C/L)
(1) Bridging - NRC			
(A) Voice Bridging per Port			
Two-Wire	$101.76	$101.76	
Four-Wire	$101.76	$101.76	
(B) Data Bridging, per Port			
Two-Wire	$0.00	$0.00	
Four-Wire	$0.00	$0.00	(C/L)
			(C/L1)
(2) Conditioning per Termination - MRC			
- C-Type	$7.53	$7.53	
- Improved Attenuation Distortion	$7.53	$7.53	
- Improved Envelope Delay Distortion	$7.53	$7.53	
- Data Capability	$7.53	$7.53	
- Sealing Current *	$0.00	$0.00	
- Telephoto Capacity (VG11 & VGC)	$7.53	$7.53	
W/DST at Customer Location	$8.43	$8.43	(C/L1)

* Sealing current is a designation for a powering situation that consists of a wet loop without span power. Sealing current is applied to copper loops to prevent corrosion of terminals and connectors, generally analog data circuits. (N) (N) (N)

(L) Matter relocated from Original Sheet No. 244
(L1) Matter relocated from Original Sheet No. 245

Tariff Advice No. U-01-42 Effective: October 1, 2002

Issued by: GCI Communication Corp.
By: F.W. [illegible] Title: Director, Rates & Tariffs

RECEIVED
JUL 0 2 2002
State of Alaska
Regulatory Commission of Alaska

GCI COMMUNICATION CORP.

ACCESS SERVICES

15. Rates and Charges – Juneau, Ft. Wainwright and Eielson AFB (Cont'd)
15.3 Special Access Service (Cont'd)
15.3.2 Voice Grade Service (Cont'd)
(C) Optional Features and Functions (Cont'd)

	Juneau	Greatland	
(2) Conditioning per Termination - NRC			(C/L)
- C-Type	$101.76	$101.76	
- Improved Attenuation Distortion	$25.44	$25.44	
- Improved Envelope Delay Distortion	$25.44	$25.44	
- Data Capability	$152.64	$152.64	
- Sealing Current *	$0.00	$0.00	
- Telephoto Capacity (VG11 & VGC)	$203.52	$203.52	
W/DST at Customer Location	$203.52	$203.52	(C/L)
(3) Improved Return Loss per Termination - MRC			(C)
- Effective Two-Wire	$0.87	$0.87	
- Effective Four-Wire	$0.87	$0.87	
Improved Return Loss per Termination - NRC			
- Effective Two-Wire	$25.44	$25.44	
- Effective Four-Wire	$25.44	$25.44	
(4) Customer Specified Receive Level per - MRC Two-Wire Termination	$7.53	$7.53	
Customer Specified Receive Level per - NRC Two-Wire Termination	$101.76	$101.76	(C) (L1)

* Sealing current is a designation for a powering situation that consists of a wet loop without span power. Sealing current is applied to copper loops to prevent corrosion of terminals and connectors, generally analog data circuits.

(L) Matter Relocated to Original Sheet 244.1
(L1) Matter Relocated to Original Sheet 245.1

Tariff Advice No. U-01-42 Effective: October 1, 2002

Issued by: GCI Communication Corp.
By: F. W. [illegible] Title: Director, Rates & Tariffs

RECE

JUL 0 2

State of
Regulatory Commi

GCI COMMUNICATION CORP.

ACCESS SERVICES

15. Rates and Charges – Juneau, Ft. Wainwright and Eielson AFB (Cont'd)
    15.3 Special Access Service (Cont'd)
        15.3.3 Voice Grade Service (Cont'd)
            (C) Optional Features and Functions (Cont'd)

	Juneau	Greatland	
(5) Signaling Capability per Termination - MRC			(C/L)
(A) VG1 – Loop Start Either End	$9.82	$9.82	
(B) VG1 – Ground Start Either End	$9.82	$9.82	
(C) VG2 – Loop Start Closed End Only	$9.82	$9.82	
(D) VG2 – Ground Start to Centrex Station Line Only	$3.40	$3.40	(C/L)
(E) VG2 – 20 hz Ringdown	$3.40	$3.40	(C/L1)
(F) VG3, VG7 – Loop Start	$9.82	$9.82	
(G) VG3, VG7 – E&M	$9.82	$9.82	
(H) VG8, VG9 – Loop start at Closed End	$9.82	$9.82	
(I) VG8, VG9 – E&N, SF, DX at Open End	$9.82	$9.82	
(J) VG8, VG9 – E&M, at Closed End	$9.82	$9.82	(C/L1)
Signaling Capability per Termination - NRC			(C/L)
(A) VG1 – Loop Start Either End	$50.88	$50.88	
(B) VG1 – Ground Start Either End	$50.88	$50.88	
(C) VG2 – Loop Start Closed End Only	$50.88	$50.88	
(D) VG2 – Ground Start to Centrex Station Line Only	$50.88	$50.88	(C/L)
(E) VG2 – 20 hz Ringdown	$50.88	$50.88	(C/L1)
(F) VG3, VG7 – Loop Start	$50.88	$50.88	
(G) VG3, VG7 – E&M	$50.88	$50.88	
(H) VG8, VG9 – Loop start at Closed End	$50.88	$50.88	
(I) VG8, VG9 – E&N, SF, DX at Open End	$50.88	$50.88	
(J) VG8, VG9 – E&M, at Closed End	$50.88	$50.88	(C/L1)

(L) Matter Relocated from Original Sheet 245
~~(L) Matter Relocated from Original Sheet 246~~

Tariff Advice No. U-01-42 Effective: October 1, 2002

Issued by: GCI Communication Corp.

By: F. W. [illegible] Title: Director, Rates & Tariffs

RECEIVED
JUL 0 2 2002
State of Alaska
Regulatory Commission of Alaska

GCI COMMUNICATION CORP.

ACCESS SERVICES

15. Rates and Charges – Juneau, Ft. Wainwright and Eielson AFB (Cont'd)
    15.3 Special Access Service (Cont'd)
        15.3.2 Voice Grade Service (Cont'd)
            (C) Optional Features and Functions (Cont'd)

	Juneau	Greatland	
(6) Transfer Arrangement (Key Activated * or Dial Up **) – MRC Per four port arrangement, including control channel termination (See Note 1)	$.57	$.57	(C)
Transfer Arrangement (Key Activated * or Dial Up **) – NRC Per four port arrangement, including control channel termination (See Note 1)	$50.88	$50.88	
(7) Transfer Arrangement (Key Activated * or Dial Up **) – MRC Per five port arrangement, including control channel termination (See Note 1)	$.57	$.57	
Transfer Arrangement (Key Activated * or Dial Up **) – NRC Per five port arrangement, including control channel termination (See Note 1)	$50.88	$50.88	(C)

* The key activated control channel is rated as a Voice Grade Channel Termination and Channel Mileage, if applicable.

** The Dial-Up Option requires the customer to purchase the Controller Arrangement.

Note 1 - An Additional Channel Termination Charge will apply whenever a spare channel is configured as a leg to the customer designated premises. Additional channel mileage charges will also apply when the transfer arrangement is not located in the customer designated premises serving wire center.

RECEIVED
JUN 10 2011
STATE OF ALASKA
REGULATORY COMMISSION OF ALASKA

GCI COMMUNICATION CORP.

ACCESS SERVICES

15. Rates and Charges – Juneau, Ft. Wainwright and Eielson AFB (Cont'd)
15.3 Special Access Service (Cont'd)

15.3.3 Digital Data Service
Regulations concerning Digital Data Service are set forth in 7.5 preceding.

(A) Channel Termination per Termination* - MRC	Juneau	Greatland	
- 2.4 kbps (w/o error correction)	$61.07	$135.00	(T)
2.4 kbps (w/ error correction)	$50.90	$135.00	
- 4.8 kbps (w/o error correction)	$61.07	$135.00	
4.8 kbps (w/ error correction)	$50.90	$135.00	
- 9.6 kbps (w/o error correction)	$61.07	$135.00	
9.6 kbps (w/ error correction)	$50.90	$135.00	
- 19.2 kbps (w/o error correction)	$61.07	$135.00	
19.2 kbps (w/ error correction)	$50.90	$135.00	
- 56.0 kbps (w/o error correction)	$61.07	$135.00	
56.0 kbps (w/ error correction)	$50.90	$135.00	
- 64.0 kbps (w/o error correction)	$127.05	$162.00	
64.0 kbps (w/ error correction)	$61.07	$162.00	
Channel Termination per Termination* - NRC			
- 2.4 kbps (w/o error correction)	$144.56	$144.56	(T)
2.4 kbps (w/ error correction)	$289.13	$289.13	
- 4.8 kbps (w/o error correction)	$144.56	$144.56	
4.8 kbps (w/ error correction)	$289.13	$289.13	
- 9.6 kbps (w/o error correction)	$144.56	$144.56	
9.6 kbps (w/ error correction)	$289.13	$289.13	
- 19.2 kbps (w/o error correction)	$144.56	$144.56	
19.2 kbps (w/ error correction)	$289.13	$289.13	
- 56.0 kbps (w/o error correction)	$144.56	$144.56	
56.0 kbps (w/ error correction)	$289.13	$289.13	
- 64.0 kbps (w/o error correction)	$144.56	$144.56	
64.0 kbps (w/ error correction)	$289.13	$289.13	

*The Channel Termination Charge Specified in Section 7.2.1(A) of this tariff will not apply when: 1) the customer designated premises and the serving wire center are physically (including caged, cageless, shared and adjacent arrangements) or virtually collocated as those terms are used in 47 CFR 51.323, and (2) the customer obtains collocation for the purpose of interconnection with the Telephone Company's network for the transmission and routing of telephone exchange service, exchange access or both, and for the purpose of providing local exchange or exchange access service to its customers. (N)

RECEIVED
JUN 2 4 2003
State of Alaska
Regulatory Commission of Alaska

GCI COMMUNICATION CORP.

ACCESS SERVICES

15. Rates and Charges – Juneau, Ft. Wainwright and Eielson AFB (Cont'd)

15.3 Special Access Service (Cont'd)

15.3.3 Digital Data Service (Cont'd)

Regulations concerning Digital Data Service are set forth in 7.5 preceding.

(B) Channel Mileage	Juneau	Greatland	
(1) Channel Mileage Facility per Mile per Month			
- 2.4 kbps	$7.35	$7.35	
- 4.8 kbps	$7.35	$7.35	
- 9.6 kbps	$7.35	$7.35	
- 19.2 kbps	$7.35	$7.35	
- 56.0 kbps	$2.77	$7.35	(R)
- 64.0 kbps	$2.77	$7.35	(R)
(2) Channel Mileage Facility Termination per Month			
- 2.4 kbps	$74.00	$74.00	
- 4.8 kbps	$74.00	$74.00	
- 9.6 kbps	$74.00	$74.00	
- 19.2 kbps	$74.00	$74.00	
- 56.0 kbps	$27.90	$74.00	(R)
- 64.0 kbps	$27.90	$74.00	(R)
(C) Optional Features and Functions			
(1) Bridging per port - MRC	$8.16	$8.16	
Bridging per port - NRC	$101.76	$101.76	

RECEIVED
JUN 1 0 2011
STATE OF ALASKA
REGULATORY COMMISSION OF ALASKA

GCI COMMUNICATION CORP.

ACCESS SERVICES

15. Rates and Charges – Juneau, Ft. Wainwright and Eielson AFB (Cont'd)
15.3 Special Access Service (Cont'd)

15.3.4 High Capacity Service

Regulations concerning High Capacity Service are set forth in 7.6 preceding.

(A) Channel Termination per Termination* - MRC	Juneau	Greatland	(T)
- 1.544 Mbps	$186.29	$337.00	
Per mile, over 3 miles	$15.08	$40.00	
- 3.152 Mbps	ICB	ICB	
- 6.312 Mbps	ICB	ICB	
- 44.736 Mbps	$1,206.40	$3,200.00	
Per mile, over 3 miles	$128.18	$340.00	
- 274.175 Mbps	ICB	ICB	
Channel Termination per Termination* - NRC			(T)
- 1.544 Mbps	$332.00	$332.74	
(B) Channel Mileage			
(1) Channel Mileage Facility per Mile			
- 1.544 Mbps	$12.82	$34.00	
- 3.152 Mbps	ICB		
- 6.312 Mbps	ICB		
- 44.736 Mbps	$75.40	$200.00	
- 274.175 Mbps	ICB		

*The Channel Termination Charge Specified in Section 7.2.1(A) of this tariff will not apply when: 1) the customer designated premises and the serving wire center are physically (including caged, cageless, shared and adjacent arrangements) or virtually collocated as those terms are used in 47 CFR 51.323, and (2) the customer obtains collocation for the purpose of interconnection with the Telephone Company's network for the transmission and routing of telephone exchange service, exchange access or both, and for the purpose of providing local exchange or exchange access service to its customers. (N) (N)

Tariff Advice No. 552-489 Effective: July 25, 2011

Issued by: GCI Communication Corp.
By: Cynthia L. Lynch Title: Tariffs and Licenses Manager

RECEIVED
JUN 2 4 2003
State of Alaska
Regulatory Commission of Alaska

GCI COMMUNICATION CORP.

ACCESS SERVICES

15. Rates and Charges – Juneau, Ft. Wainwright and Eielson AFB (Cont'd)
15.3 Special Access Service (Cont'd)
15.3.4 High Capacity Service (Cont'd)
(B) Channel Mileage (Cont'd)

	Juneau	Greatland	
(2) Channel Mileage Termination per Termination			
- 1.544 Mbps	$59.19	$157.00	(R)
- 3.152 Mbps	ICB		
- 6.312 Mbps	ICB		
- 44.736 Mbps	$188.50	$500.00	(R)
- 274.175 Mbps	ICB		

(C) Optional Features and Functions

(1) Multiplexing, per arrangement - MRC			
- DS4 to DS1	ICB***		
- DS3 to DS1	$145.15	$385.00	(R)
- DS2 to DS1	ICB***		
- DS1C to DS1	ICB***		
- DS1 to Voice*	$59.19	$157.00	(R)
- DS1 to DS0	ICB		
- DS0 to twenty (20) 2.4 kbps	ICB		
- DS0 to ten (10) 4.8 kbps	ICB		
- DS0 to five (5) 9.6 kbps	ICB		

* A channel of this DS1 to the Hub can be used for Digital Data service.

*** All ICB rate elements are in the Additional Engineering section and tariffed equipment rate sections.

RECEIVED
JUN 29 2004
State of Alaska
Regulatory Commission of Alaska

GCI COMMUNICATION CORP.

ACCESS SERVICES

15. Rates and Charges – Juneau, Ft. Wainwright and Eielson AFB (Cont'd)
15.3 Special Access Service (Cont'd)
15.3.4 High Capacity Service (Cont'd)

	Juneau	Greatland	
(C) Optional Features and Functions			
(1) Multiplexing, per arrangement NRC			
- DS4 to DS1	ICB***		
- DS3 to DS1	ICB***		
- DS2 to DS1	ICB***		
- DS1C to DS1	ICB***		
- DS1 to Voice*	$59.19	$157.00	(R/ R)
- DS1 to Voice Non Recurring	$76.73	$203.52	(N/N)
- DS1 to DS0	ICB		
- DS0 to twenty (20) 2.4 kbps	ICB		
- DS0 to ten (10) 4.8 kbps	ICB		
- DS0 to five (5) 9.6 kbps	ICB		
(2) Automatic Loop Transfer per arrangement**	$8.33	$8.33	

(D) All ICB rates currently provided to customers are shown on the next page.

* A channel of this DS1 to the Hub can be used for Digital Data service.
** An additional Channel Termination charge will apply whenever the spare line is provided as a leg to the customer designated premises.
*** All ICB rate elements are in the Additional Engineering section and tariffed equipment rate sections.

(L) Matter relocated to Original Sheet 248.1.

Tariff Advice No. 277 Effective: August 13, 2004

Issued by: GCI Communication Corp.
By: Jennifer K.G. Robertson Title: Tariffs and Licenses Manager

RECEIVED
JUL 0 2 2002
State of Alaska
Regulatory Commission of Alaska

GCI COMMUNICATION CORP.

ACCESS SERVICES

15. Rates and Charges – Juneau, Ft. Wainwright and Eielson AFB (Cont'd)

15.4 Additional Engineering, Additional Labor and Miscellaneous Service

Regulations Concerning Additional Engineering, Additional labor and Miscellaneous Services are set forth in 9 preceding.

15.4.1 The Charges for Additional Engineering:

	Juneau	Greatland	
(A) Basic Time, normally scheduled working hours per engineer (each half hour or fraction thereof)	$46.58	$46.58	(C)
(B) Overtime, outside of normally scheduled working hours, on a scheduled work day, per engineer * (each half hour or fraction thereof)	$69.87	$69.87	(C)
(C) Premium Time, outside of scheduled work day per engineer * (each half hour or fraction thereof)	$93.16	$93.16	(C/L)

*A call-out of a Company employee at a time not consecutive with the employee's scheduled working period is subject to a minimum charge of four hours.

(L) Matter relocated from Original Sheet 250.

Tariff Advice No. U-01-42 Effective: October 1, 2002

Issued by: GCI Communication Corp.

By: F.W. [illegible] Title: Director, Rates & Tariffs

RECEIVED
JUL 0 2 2002
State of Alaska
Regulatory Commission of Alaska

GCI COMMUNICATION CORP.

ACCESS SERVICES

15. Rates and Charges – Juneau, Ft. Wainwright and Eielson AFB (Cont'd)
15.4 Additional Engineering, Additional Labor and Miscellaneous Service (Cont'd)

	Juneau	Greatland	(L) (C)
15.4.2 The charges for Additional Labor:			
(A) Installation and Repair			
(1) Overtime, outside of normally scheduled working hours on a scheduled work day, per technician (each half hour or fraction thereof*)	$59.72	$59.72	
(2) Premium Time, outside of normally scheduled working day, per technician (each half hour or fraction thereof*)	$79.62	$79.62	
(B) Standby			
(1) Basic Time, normally scheduled working hours, per technician (each half hour or fraction thereof*)	$39.81	$39.81	
(2) Overtime, outside of normally scheduled working hours on a scheduled work day, per technician (each half hour or fraction thereof*)	$59.72	$59.72	
(3) Premium time, outside of scheduled working day, per technician (each half hour or fraction thereof*)	$79.62	$79.62	(C)

*A call-out of a Company employee at a time not consecutive with the employee's scheduled working period is subject to a minimum charge of four hours.
(L) Matter relocated from Original Sheet No. 249.1.

Tariff Advice No. U-01-42 Effective: October 1, 2002

Issued by: GCI Communication Corp.
By: F. W. [illegible] Title: Director, Rates & Tariffs

RECEIVED
JUL 0 2 2002
State of Alaska
Regulatory Commission of Alaska

GCI COMMUNICATION CORP.

ACCESS SERVICES

15. Rates and Charges – Juneau, Ft. Wainwright and Eielson AFB (Cont'd)
    15.4 Additional Engineering, Additional Labor and Miscellaneous Service (Cont'd)
        15.4.2 The Charges for Additional Labor (Cont'd)

	Juneau	Greatland	(C)
(C) Testing and Maintenance with other telephone companies, or other labor.			
(1) Installation and Repair			
Basic Time - normally scheduled working hours, per technician (each half hour or fraction thereof*)	$39.81	$39.81	
Overtime - outside of normally scheduled working hours on a scheduled work day, per technician (each half hour or fraction thereof*)	$59.72	$59.72	
Premium Time - outside of scheduled work day per technician (each half hour of fraction thereof*)	$79.62	$79.62	
(2) Central Office Maintenance			
Basic Time - normally scheduled working hours, per technician (each half hour or fraction thereof*)	$39.81	$39.81	
Overtime - outside of normally scheduled working hours on a scheduled work day, per technician (each half hour or fraction thereof*)	$59.72	$59.72	
Premium Time - outside of scheduled work day per technician (each half hour of fraction thereof*)	$79.62	$79.62	(C)

*A call-out of a Company employee at a time not consecutive with the employee's scheduled working period is subject to a minimum charge of four hours.

Tariff Advice No. U-01-42 Effective: October 1, 2002

Issued by: GCI Communication Corp.

By: T. W. [illegible] Title: Director, Rates & Tariffs

RECEIVED
DEC 21 2018
STATE OF ALASKA
REGULATORY COMMISSION OF ALASKA

GCI COMMUNICATION CORP.

ACCESS SERVICES

16. Rates and Charges – Matanuska-Susitna

16.1 Line Charges

a. Carrier Common Line (CCL) Rate

This charge is billed to AUSAC as described in section 3.7 preceding. (N) (D)

b. Network Access Fee (NAF) Rate

The total RCA NAF Rate is $5.75 per line per month.

RECEIVED
JUL 29 2016
STATE OF ALASKA
REGULATORY COMMISSION OF ALASKA

GCI COMMUNICATION CORP.

ACCESS SERVICES

16. Rates and Charges – Matanuska-Susitna (Cont'd)

16.2.1 Nonrecurring Charges

		Rate	Reference	
(A)	Access Order	$86.00	5.2	
(B)	Service Date Change Charge	$60.00	5.8	
(C)	Design Change Charge	$84.00	5.8	
(D)	Miscellaneous Service Order Charge	$123.00	5.8	
(E)	Entrance Facility Installation – DS1 Entrance Facility Installation – DS3 Trunk Activation Per Order	$352.76* $475.69* $490.64		
(F)	Interim NXX Translation Per Order	$235.17	6.8	
(G)	Telecommunications Service Priority Charge Per Circuit	$61.74	9.3	(I)

* Where facilities are available.

Pursuant to: TA578-489 Effective: July 1, 2016

Issued by: GCI Communication Corp.

By: Cynthia L. Hall Title: Tariffs and Licenses Manager

RECEIVED
JUN 29 2022
STATE OF ALASKA
REGULATORY COMMISSION OF ALASKA

GCI COMMUNICATION CORP.

ACCESS SERVICES

16. Rates and Charges – Matanuska-Susitna (Cont'd)

16.2.2 Recurring Charges

		Rate	Reference	
(A)	Common Transport Per Minutes of Use – Orig Toll	$0.0010	6.8	
	Terminating Tandem Switched Termination -per termination	$0.001473		
	Terminating Tandem Switched Transport Facility -per access minute per mile	$0.000283		
	Terminating Tandem Switching	$0.000000		(R)
	Joint Tandem Switched Transport – Orig Toll Free	$0.001		
(B)	Entrance Facility, per termination – DS1*	$151.00**		
	Entrance Facility, per termination – DS3*	$1,378.77**		
	Direct Trunked Transport			
	Direct Trunked Termination – DS1	$53.68**		
	Direct Trunked Termination – DS3	$344.68**		
	Direct Trunked Facility, per mile – DS1	$10.34**		
	Direct Trunked Facility – DS3	$90.12**		
(C)	Multiplexing, per arrangement – DS3 to DS1	$314.49**		
	Multiplexing, per arrangement –DS1 to Voice	$121.42**		
(D)	Local Switching (Per Minutes of Use) – Originating Toll	$0.010	6.8	
	Local Switching (Per Minutes of Use) - Originating Toll Free	$0.004746	6.8	(R)
(E)	Information Surcharge Per 100 Minutes – Orig Toll	$0.382	6.8	
	Information Surcharge Per 100 Minutes- Originating Toll Free	$0.0174	6.8	(I)

*The Entrance Facility charges specified in Section 6.2 of this tariff will not apply when: 1) the customer designated premises and the serving wire center are physically (including caged, cageless, shared and adjacent arrangements) or virtually collocated as those terms are used in 47 CFR 51.323, and 2) the customer obtains collocation for the purpose of interconnection with the Telephone Company's network for the transmission and routing of telephone exchange service, exchange access or both, and for the purpose of providing local exchange access services to its customers.

** Where facilities are available.

RECEIVED
JUN 29 2022
STATE OF ALASKA
REGULATORY COMMISSION OF ALASKA

GCI COMMUNICATION CORP.

ACCESS SERVICES

16. Rates and Charges – Matanuska-Susitna (Cont'd)
16.2 Switched Access Service (Cont'd)
16.2.2 Recurring Charges (Cont'd)

	Rate	Reference	
(F) TSP Database Charge Per Circuit	$1.00	9.3	
(G) Toll Free Database Access Service Queries			
Equal Access	$0.002224	6.8	(R)
Non-Equal Access	$0.002224	6.8	(R)
16.2.3 Equal Access Recovery Charge Monthly Rate per Presubscribed Equal Access Line	$0.00	6.8	
16.2.4 Presubscription Change Charge Submitted using manual methods	$5.50	9.3	
Submitted using manual methods when both the interLATA PIC and intraLATA PIC selections are changed simultaneously	$1.25	9.3	

16.2.5 Assumed Minutes of Use	Assumed Minutes Per Month	Tariff Section Reference
(A) Feature Group A, Two Way Calling (1510 Originating, 2685 Terminating)	4195	6.8
(B) Feature Group A, Originating Only	1510	6.8
(C) Feature Group A, Terminating Only	2685	6.8
(D) Feature Group B, Two Way Calling (3132 Originating, 5568 Terminating)	8700	6.8
(E) Feature Group B, Originating Only	3132	6.8
(F) Feature Group B, Terminating Only	5568	6.8

RECEIVED
MAY 11 2007
STATE OF ALASKA
REGULATORY COMMISSION OF ALASKA

GCI COMMUNICATION CORP.

ACCESS SERVICES

16. Rates and Charges – Matanuska-Susitna (Cont'd)

16.3 Special Access Service

Regulations concerning charges associated with Surcharge for Special Access Service are set forth in 7.3 preceding.

16.3.1a Surcharge Monthly Rate $25.00

16.3.1b Telecommunications Service Priority Charge
Regulations concerning charges associated with Surcharge for Miscellaneous Service are set forth in 9.3 preceding.

	Monthly	NRC
	$1.00	$55.00

16.3.1c Special Access Ordering
Regulations concerning charges associated with Access Ordering are set forth in 5.2 and 5.8 preceding

(A) Access Order Charge Per Order	$93.00	(R)
(B) Service Date Change Charge Service Date Change Charge will apply, on a per order per occurrence basis, for each service date changed. The Access Order Charge as specified in 143.1c(A) preceding does not apply.	$44.00	(R)
(C) Design Change Charge The Design Change Charge will apply on a per order per occurrence basis, for each order requiring design change.	$44.00	(R)
(D) Miscellaneous Service Order Charge	$44.00	(R)

Pursuant to:
U-06-136(5)

Effective: July 2, 2007

Issued by: GCI Communication Corp.

By: Jennifer K.G. Robinson

Title: Tariffs and Licenses Manager

RECEIVED
MAR 11 2010
STATE OF ALASKA
REGULATORY COMMISSION OF ALASKA

GCI COMMUNICATION CORP.

ACCESS SERVICES

16. Rates and Charges – Matanuska-Susitna (Cont'd)
16.3 Special Access Service (Cont'd)

16.3.2 Voice Grade Service

Regulations concerning Voice Grade are set forth in 7.2 preceding. (T)

	Monthly Rate	NRC	
(A) Channel Termination Per Termination*			
Two-Wire	$54.94	$216.65	(I/R)
Four-Wire	$87.90	$216.65	(I/R)
(B) Channel Mileage			
(1) Channel Mileage Facility per Mile			
Two-Wire	$3.91		(I)
Four-Wire	$3.91		(I)
(2) Channel Mileage Termination per Term			
Two-Wire	$39.33		(I)
Four-Wire	$39.33		(I)

(C) Optional Features and Functions	Monthly Rate	
(1) Bridging		
(A) Voice Bridging per Port		
Two-Wire	$2.61	(R)
Four-Wire	$2.61	(R)
(B) Data Bridging per Port		
Two-Wire	$2.61	(R)
Four-Wire	$2.61	(R)

*The Channel Termination Charge Specified in Section 7.2.1(A) of this tariff will not apply when: 1) the customer designated premises and the serving wire center are physically (including caged, cageless, shared and adjacent arrangements) or virtually collocated as those terms are used in 47 CFR 51.323, and (2) the customer obtains collocation for the purpose of interconnection with the Telephone Company's network for the transmission and routing of telephone exchange service, exchange access or both, and for the purpose of providing local exchange or exchange access service to its customers. (N) (N)

Tariff Advice No. 539 Effective: March 20, 2010

Issued by: GCI Communication Corp.

By: Cynthia L. Lynch Title: Tariffs and Licenses Manager

RECEIVED
MAR 1 1 2010
STATE OF ALASKA
REGULATORY COMMISSION OF ALASKA

GCI COMMUNICATION CORP.

ACCESS SERVICES

16. Rates and Charges – Matanuska-Susitna (Cont'd)
16.3 Special Access Service (Cont'd)
16.3.2 Voice Grade Service (Cont'd)
(C) Optional Features and Functions (Cont'd)

	Monthly Rate
(2) Conditioning per Termination	
- C-Type	$6.42
- Improved Attenuation Distortion	$0.00
- Improved Envelope Delay Distortion	$0.00
- Data Capability	$4.41
- Sealing Current	$0.00
(3) Improved Return Loss per Termination	
- Effective Two-Wire	$11.40
- Effective Four-Wire	$11.40
(4) Customer Specified Receive Level per Two-Wire Termination	$0.00
(5) Signaling Capability per Termination	$11.54

16.3.3 Digital Data Service

Regulations concerning Digital Data Service are set forth in 7.5 preceding.

	Monthly Rate	NRC	
(A) Channel Termination per Termination*			
- 2.4 kbps to 64.0 kbps	$101.39	$259.31	(C/I/R)

* The Channel Termination Charge Specified in Section 7.2.1(A) of this tariff will not apply when: 1) the customer designated premises and the serving wire center are physically (including caged, cageless, shared and adjacent arrangements) or virtually collocated as those terms are used in 47 CFR 51.323, and (2) the customer obtains collocation for the purpose of interconnection with the Telephone Company's network for the transmission and routing of telephone exchange service, exchange access or both, and for the purpose of providing local exchange or exchange access service to its customers (N) (N)

Tariff Advice No. 539 Effective: March 20, 2010

Issued by: GCI Communication Corp.
By: Cynthia L. Lynch Title: Tariffs and Licenses Manager

RECEIVED
MAR 11 2010
STATE OF ALASKA
REGULATORY COMMISSION OF ALASKA

GCI COMMUNICATION CORP.

ACCESS SERVICES

16. Rates and Charges – Matanuska-Susitna (Cont'd)
    16.3 Special Access Service (Cont'd)
        16.3.3 Digital Data Service (Cont'd)

(B) Channel Mileage

(1) Channel Mileage Facility per Mile per Month		(2) Channel Mileage Facility Termination per Month		
- 2.4 kbps	$3.73	- 2.4 kbps	$37.35	(I/I)
- 4.8 kbps	$3.73	- 4.8 kbps	$37.35	(I/I)
- 9.6 kbps	$3.73	- 9.6 kbps	$37.35	(I/I)
- 19.2 kbps	$3.73	- 19.2 kbps	$37.35	(I/I)
- 56.0 kbps	$5.28	- 56.0 kbps	$52.94	(I/I)
- 64.0 kbps	$5.28	- 64.0 kbps	$52.94	(I/I)

(C) Optional Features and Functions	Monthly Rate	
(1) Bridging per port	$2.02	(R)

Tariff Advice No. 539 Effective: March 20, 2010

Issued by: GCI Communication Corp.

By: Cynthia L Lynch Title: Tariffs and Licenses Manager

RECEIVED
MAR 1 1 2010
STATE OF ALASKA
REGULATORY COMMISSION OF ALASKA

GCI COMMUNICATION CORP.

ACCESS SERVICES

16. Rates and Charges – Matanuska-Susitna (Cont'd)
16.3 Special Access Service (Cont'd)

16.3.4 High Capacity Service
Regulations concerning High Capacity Service are set forth in 7.6 preceding.

(A) Channel Termination per Termination*	Monthly Rate	NRC	
- 1.544 Mbps	$287.50	$396.76	(I/I)
- 3.152 Mbps	ICB	ICB	
- 6.312 Mbps	ICB	ICB	
- 44.736 Mbps	ICB	ICB	
- 274.175 Mbps	ICB	ICB	

(L)

(N)

* The Channel Termination Charge Specified in Section 7.2.1(A) of this tariff will not apply when: 1) the customer designated premises and the serving wire center are physically (including caged, cageless, shared and adjacent arrangements) or virtually collocated as those terms are used in 47 CFR 51.323, and (2) the customer obtains collocation for the purpose of interconnection with the Telephone Company's network for the transmission and routing of telephone exchange service, exchange access or both, and for the purpose of providing local exchange or exchange access service to its customers.

(N)
(L)

(L) Matter relocated to 2nd Revised Sheet 260.

Tariff Advice No. 539 Effective: March 20, 2010

Issued by: GCI Communication Corp.
By: Cynthia L Lynch Title: Tariffs and Licenses Manager

RECEIVED
MAR 1 1 2010
STATE OF ALASKA
REGULATORY COMMISSION OF ALASKA

GCI COMMUNICATION CORP.

ACCESS SERVICES

16. Rates and Charges – Matanuska-Susitna (Cont'd)
    16.3 Special Access Service (Cont'd)
        16.3.4 High Capacity Service (Cont'd)

(B) Channel Mileage (L)

(1) Channel Mileage Facility per Mile

- 1.544 Mbps	$19.69	(I)
- 3.152 Mbps	ICB	
- 6.312 Mbps	ICB	
- 44.736 Mbps	ICB	
- 274.175 Mbps	ICB	

(2) Channel Mileage Termination per Termination

- 1.544 Mbps	$102.19	(I)
- 3.152 Mbps	ICB	
- 6.312 Mbps	ICB	
- 44.736 Mbps	ICB	
- 274.175 Mbps	ICB	

(L)

(C) Optional Features and Functions

(1) Multiplexing, per arrangement

- DS4 to DS1	ICB***	
- DS3 to DS1	$422.63	
- DS2 to DS1	ICB***	
- DS1C to DS1	ICB***	
- DS1 to Voice*	$222.05	(I)
- DS1 to DS0	$351.60	(I)
- DS0 to twenty (20) 2.4 kbps	$347.50	
- DS0 to ten (10) 4.8 kbps	$236.12	
- DS0 to five (5) 9.6 kbps	$209.39	

(2) Automatic Loop Transfer per arrangement** $140.78

* A channel of this DS1 to the Hub can be used for Digital Data service.
** An additional Channel Termination charge will apply whenever the spare line is provided as a leg to the customer designated premises.
*** All ICB rate elements are in the Additional Engineering section and tariffed equipment rate sections.

(L) Matter relocated from 2nd Revised Sheet 259.

Tariff Advice No. 539 Effective: March 20, 2010

Issued by: GCI Communication Corp.

By: Cynthia L. Lynch Title: Tariffs and Licenses Manager

RCA No. 489 | 3rd Revised | Sheet No. 261

Canceling

2nd Revised | Sheet No. 261

RECEIVED
APR 11 2014
STATE OF ALASKA
REGULATORY COMMISSION OF ALASKA

GCI COMMUNICATION CORP.

ACCESS SERVICES

16. Rates and Charges – Matanuska-Susitna (Cont'd)

16.4 Additional Engineering, Labor and Miscellaneous Service – Special Access (T)
Regulations Concerning Additional Engineering, Additional labor and Miscellaneous Services are set forth in 9 preceding.

16.4.1 The Charges for Engineering: (T)

(A) Basic Time, normally scheduled working hours per engineer (each half hour or fraction thereof) $45.53

(B) Overtime, outside of normally scheduled working hours per engineer (each half hour or fraction thereof) $48.79

(C) Premium Time, outside of scheduled work day per engineer (each half hour or fraction thereof) $60.47

16.4.2 The charges for Additional Labor- Telephone Technician:

(A) Installation and Repair

(1) Overtime, outside of normally scheduled working hours on a scheduled work day, per technician (each half hour or fraction thereof*) $46.20

(2) Overtime, outside of normally scheduled working hours on a scheduled work day, per technician (each half hour or fraction thereof*) $49.25

(3) Premium Time, outside of normally scheduled working day, per technician (each half hour or fraction thereof*) $60.62

*A call-out of a Company employee at a time not consecutive with the employee's scheduled working period is subject to a minimum charge of four hours.

Pursuant to U-13-134(7) Effective: July 1, 2013

Issued by: GCI Communication Corp.

By: Patty Diener for Cindy Hall Title: Tariffs and Licenses Manager

RECEIVED
MAR 1 1 2010
STATE OF ALASKA
REGULATORY COMMISSION OF ALASKA

GCI COMMUNICATION CORP.

ACCESS SERVICES

16. Rates and Charges – Matanuska-Susitna (Cont'd)
    16.4 Additional Engineering, Additional Labor and Miscellaneous Service (Cont'd)
        16.4.2 The charges for Additional Labor (Cont'd)

(B) Circuit Coordinator (D)(N)

Basic Time - normally scheduled working hours, per technician (each half hour or fraction thereof*) $46.20

Overtime - outside of normally scheduled working hours on a scheduled work day, per technician (each half hour or fraction thereof*) $49.25

Premium Time - outside of scheduled work day per technician (each half hour of fraction thereof*) $60.62

(C) Senior Commercial Account Administrator (D)

Basic Time - normally scheduled working hours, per technician (each half hour or fraction thereof*) $25.92

Overtime - outside of normally scheduled working hours on a scheduled work day, per technician (each half hour or fraction thereof*) $26.20

Premium Time - outside of scheduled work day per technician (each half hour of fraction thereof*) $33.26

*A call-out of a Company employee at a time not consecutive with the employee's scheduled working period is subject to a minimum charge of four hours. (N)

Tariff Advice No. 539 Effective: March 20, 2010

Issued by: GCI Communication Corp.

By: Cynthia L Lynch Title: Tariffs and Licenses Manager

RECEIVED
MAR 16 2010
STATE OF ALASKA
REGULATORY COMMISSION OF ALASKA

GCI COMMUNICATION CORP.

ACCESS SERVICES

16. Rates and Charges – Matanuska-Susitna (Cont'd)
    16.3 Special Access Service (Cont'd)
        16.4.2 The Charges for Additional Labor (Cont'd)

(D) Testing and Maintenance with other telephone companies, or other labor. (C)

(1) Installation and Repair – Telephone Technician (C)

Basic Time - normally scheduled working hours, per technician (each half hour or fraction thereof*)$46.20 (R)

Overtime - outside of normally scheduled working hours on a scheduled work day, per technician (each half hour or fraction thereof*) $49.25 (R)

Premium Time - outside of scheduled work day per technician (each half hour of fraction thereof*)$60.62 (R)

(2) Central Office Maintenance – Telephone Technician (C)

Basic Time - normally scheduled working hours, per technician (each half hour or fraction thereof*)$46.20 (R)

Overtime - outside of normally scheduled working hours on a scheduled work day, per technician (each half hour or fraction thereof*) $49.25 (R)

Premium Time - outside of scheduled work day per technician (each half hour of fraction thereof*)$60.62 (R)

*A call-out of a Company employee at a time not consecutive with the employee's scheduled working period is subject to a minimum charge of four hours.

Tariff Advice No. 539 Effective: March 20, 2010

Issued by: GCI Communication Corp.

By: Cynthia L. Lynch Title: Tariffs and Licenses Manager

RECEIVED
JUL 29 2016
STATE OF ALASKA
REGULATORY COMMISSION OF ALASKA

GCI COMMUNICATION CORP.

ACCESS SERVICES

16. Rates and Charges – Matanuska-Susitna (Cont'd)

16.5 Additional Engineering, Labor and Miscellaneous Service – Switched Access
Regulations Concerning Additional Engineering, Additional labor and Miscellaneous Services are set forth in 9 preceding. Each Half Hour, or Fraction Thereof.

16.5.1 The Charges for Engineering:		
(A) Basic Time, per engineer	$31.03	
(B) Overtime, per engineer	$46.55	
(C) Premium Time, per engineer	$62.02	(R)
16.5.2 Additional Labor Periods:*		
(A) Installation and Repair		
(1) Overtime, per technician	$47.57*	
(2) Overtime, per technician	$63.42*	
(B) Standby		
(1) Basic Time, per technician	$21.18*	
(2) Overtime, per technician	$31.77*	
(3) Premium Time, per technician	$42.36*	
(C) Testing and Maintenance, Installation and Repair		
(1) Basic Time, per technician	$31.71	
(2) Overtime, per technician	$47.57*	
(3) Premium Time, per technician	$63.42*	
(D) Central Office Maintenance, Technician		
(1) Basic Time, per technician	$34.66	
(2) Overtime, per technician	$51.99*	
(3) Premium Time, per technician	$69.32*	

*A call-out of a Company employee at a time not consecutive with the employee's scheduled working period is subject to a minimum charge of four hours.

Pursuant to TA578-489 Effective:

July 1, 2016

Issued by: GCI Communication Corp.

By: Cynthia L. Hall Title: Tariffs and Licenses Manager

RECEIVED
DEC 21 2018
STATE OF ALASKA
REGULATORY COMMISSION OF ALASKA

GCI COMMUNICATION CORP.

ACCESS SERVICES

17. Rates and Charges – Ketchikan

17.1 Line Charges

a. Carrier Common Line (CCL) Rate

This charge is billed to AUSAC as described in section 3.7 preceding. (N) (D)

b. Network Access Fee (NAF) Rate

The total RCA NAF Rate is $5.75 per line per month.

RECEIVED
JUN 27 2018
STATE OF ALASKA
REGULATORY COMMISSION OF ALASKA

GCI COMMUNICATION CORP.

ACCESS SERVICES

17. Rates and Charges – Ketchikan (Cont'd)

17.2 Switched Access Service

17.2.1 Nonrecurring Charges

	Rate	Reference	
(A) Access Order	$86.00	5.2	
(B) Service Date Change Charge	$60.00	5.8	
(C) Design Change Charge	$84.00	5.8	
(D) Miscellaneous Service Order Charge	123.00	5.8	
(E) Entrance Facility Installation – DS1	$246.22		(R)
Entrance Facility Installation – DS3	$475.69*		
Trunk Activation Per Order	$342.45		(R)
(F) Interim NXX Translation Per Order	ICB	6.8	(C)
(G) Telecommunications Service Priority Charge Per Circuit	$54.63	9.3	

• Where facilities are available

RECEIVED
JUN 29 2022
STATE OF ALASKA
REGULATORY COMMISSION OF ALASKA

GCI COMMUNICATION CORP.

ACCESS SERVICES

17. Rates and Charges – Ketchikan (Cont'd)
    17.2 Switched Access Service
        17.2.2 Recurring Charges

	Rate	Reference	
(A) Common Transport Per Minutes of Use – Orig Toll	N/A	6.8	
Terminating Tandem Switching	$0.000000		
Joint Tandem Switched Transport – Orig Toll Free	N/A		
(B) Entrance Facility, per termination – DS1 *	$277.29		
Entrance Facility, per termination – DS3 **	$2531.83		
Direct Trunked Transport			
Direct Trunk Termination – DS1	$98.57		
Direct Trunk Termination – DS3**	$632.94		
Direct Trunk Facility – DS1	$19.00		
Direct Trunk Facility – DS3**	$165.49		
(C) Multiplexing, per arrangement – DS3 to DS1**	$577.49		
Multiplexing, per arrangement – DS1 to Voice	$222.97		
(D) Local Switching (Per Minutes of Use) – Originating Toll	$0.023956	6.8	
Local Switching (Per Minutes of Use) – Originating Toll Free	$0.011978	6.8	(I)
(E) Information Surcharge Per 100 Minutes – Originating Toll	$0.191569	6.8	
Information Surcharge Per 100 Minutes – Originating Toll Free	$0.095785	6.8	(I)
(E) TSP Database Charge Per Circuit	N/A	9.3	
(F) Toll Free Database Access Service Queries	$$0.002224	6.8	(R)

* The Entrance Facility charge specified in Section 6.8 of this tariff will not apply when:
1) the customer designated premises and the serving wire center are physically (including caged, cageless, shared and adjacent arrangements) or virtually collocated as those terms are used in 47 CFR 51.323 and 2) the customer obtains collocation for the purpose of interconnection with the Telephone Company's network for the transmission and routing of telephone exchange service, exchange access or both, and for the purpose of providing local exchange or exchange access services to its customers.

**Where facilities are available

Tariff Advice No. TA 597-489 Effective: July 1, 2022

Issued by: GCI Communication Corp.

By: Karen Crapps Title: Director, Regulatory Affairs

RECEIVED

JUN 11 2013

STATE OF ALASKA
REGULATORY COMMISSION OF ALASKA

GCI COMMUNICATION CORP.

ACCESS SERVICES

17. Rates and Charges – Ketchikan (Cont'd)
17.2 Switched Access Service (Cont'd)

	Rate	Reference	
17.2.3 Equal Access Recovery Charge Monthly Rate per Presubscribed Equal Access Line	$0.00	6.8	
17.2.4 Presubscription Change Charge Submitted using manual methods	$5.50	9.3	(I/T)
Submitted using manual methods when both the interLATA PIC and intraLATA PIC selections are changed simultaneously	$2.75	9.3	(N) | (N)

17.2.5 Assumed Minutes of Use

	Assumed Minutes Per Month	Tariff Section Reference
(A) Feature Group A, Two Way Calling (1510 Originating, 2685 Terminating)	4195	6.8
(B) Feature Group A, Originating Only	1510	6.8
(C) Feature Group A, Terminating Only	2685	6.8
(D) Feature Group B, Two Way Calling (3132 Originating, 5568 Terminating)	8700	6.8
(E) Feature Group B, Originating Only	3132	6.8
(F) Feature Group B, Terminating Only	5568	6.8

Pursuant to U-13-134(1)

Effective: July 01, 2013

Issued by: GCI Communication Corp.

By: Cynthia L. Lynch Title: Tariffs and Licenses Manager

RECEIVED
JUN 04 2008
STATE OF ALASKA
REGULATORY COMMISSION OF ALASKA

GCI COMMUNICATION CORP.

ACCESS SERVICES

17. Rates and Charges – Ketchikan (Cont'd)

17.3 Special Access Service

Regulations concerning charges associated with Surcharge for Special Access Service are set forth in 7.3 preceding.

17.3.1a Surcharge Monthly Rate $25.00

17.3.1b Telecommunications Service Priority Charge
Regulations concerning charges associated with Surcharge for Miscellaneous Service are set forth in 9.3 preceding.

Monthly	NRC
$1.00	$55.00

17.3.1c Special Access Ordering
Regulations concerning charges associated with Access Ordering are set forth in 5.2 and 5.8 preceding

(A) Access Order Charge Per Order	$97.00	(R)
(B) Service Date Change Charge Service Date Change Charge will apply, on a per order per occurrence basis, for each service date changed. The Access Order Charge as specified in 143.1c(A) preceding does not apply.	$44.00	(I)
(C) Design Change Charge The Design Change Charge will apply on a per order per occurrence basis, for each order requiring design change.	$44.00	(I)
(D) Miscellaneous Service Order Charge	$44.00	(I)

Pursuant to:
U-07-52(8)

Effective: July 21, 2008

Issued by: GCI Communication Corp.

By: Jennifer K.G. Robertson

Title: Tariffs and Licenses Manager

RECEIVED
AUG 2 4 2009
STATE OF ALASKA
REGULATORY COMMISSION OF ALASKA

GCI COMMUNICATION CORP.

ACCESS SERVICES

17. Rates and Charges – Ketchikan (Cont'd)
    17.3 Special Access Service (Cont'd)

17.3.2 Voice Grade Service

Regulations concerning Voice Grade are set forth in 7.4 preceding.

(A) Channel Termination Per Termination *	Monthly Rate	NRC	
Two-Wire	$111.65	$325.00	(R)
Four-Wire	$178.60	$325.00	(R)
(B) Channel Mileage			
(1) Channel Mileage Facility per Mile			
Two-Wire	$0.00		
Four-Wire	$0.00		
(2) Channel Mileage Termination per Term			
Two-Wire	$0.00		
Four-Wire	$0.00		

(L)

(L)

* The Channel Termination charge specified in Section 7.4 of this tariff will not apply when: (N)

1) the customer designated premises and the serving wire center are physically (including caged, cageless, shared and adjacent arrangements) or virtually collocated as those terms are used in 47 CFR 51.323 and
2) the customer obtains collocation for the purpose of interconnection with the Telephone Company's network for the transmission and routing of telephone exchange service, exchange access or both, and for the purpose of providing local exchange or exchange access services to its customers. (N)

(L) Matter relocated to Original Sheet 268.1.

Tariff Advice No. 528 Effective: September 4, 2009

Issued by: GCI Communication Corp.

By: _____ Title: Tariffs and Licenses Manager

RECEIVED
AUG 2 4 2009
STATE OF ALASKA
REGULATORY COMMISSION OF ALASKA

GCI COMMUNICATION CORP.

ACCESS SERVICES

17. Rates and Charges – Ketchikan (Cont'd)
    17.3 Special Access Service (Cont'd)

    17.3.2 Voice Grade Service
    Regulations concerning Voice Grade are set forth in 7.4 preceding.

(C) Optional Features and Functions	Monthly Rate	
(1) Bridging		(L)
(A) Voice Bridging per Port		
Two-Wire	$6.54	
Four-Wire	$6.54	
(B) Data Bridging per Port		
Two-Wire	$6.54	
Four-Wire	$6.54	
(C) Telephoto Bridging per Port		
Two-Wire	$6.54	
Four-Wire	$6.54	(L)

(L) Matter relocated from 3rd Revised Sheet 268.

Tariff Advice No. 528 Effective: September 4, 2009

Issued by: GCI Communication Corp.

By: Title: Tariffs and Licenses Manager

RECEIVED
JUN 04 2008
STATE OF ALASKA
REGULATORY COMMISSION OF ALASKA

GCI COMMUNICATION CORP.

ACCESS SERVICES

17. Rates and Charges – Ketchikan (Cont'd)
    17.3 Special Access Service (Cont'd)
        17.3.2 Voice Grade Service (Cont'd)
            (C) Optional Features and Functions (Cont'd)

	Monthly Rate	
(2) Conditioning per Termination		
- C-Type	$7.25	(I)
- Improved Attenuation Distortion	$0.00	
- Improved Envelope Delay Distortion	$0.00	
- Data Capability	$4.98	(I)
- Telephoto Capability	$9.09	
- Sealing Current	$0.00	
(3) Improved Return Loss per Termination		
- Effective Two-Wire	$12.88	(I)
- Effective Four-Wire	$12.88	(I)
(4) Customer Specified Receive Level per Two-Wire Termination	$8.86	(I)
(5) Multiplexing, per Arrangement Voice to Telegraph Grade	$227.74	(I)
(6) Signaling Capability per Termination	$13.04	(I)
(7) Selective Signaling Arrangement, per Arrangement	$6.54	(I)
(8) Transfer Arrangement		
4 Port	$3.15	(I)
5 Port	$7.20	(I)

Pursuant to:
U-07-52(8)

Effective: July 21, 2008

Issued by: GCI Communication Corp.

By: Jennifer K.G. Robertson

Title: Tariffs and Licenses Manager

RECEIVED
JUN 04 2008
STATE OF ALASKA
REGULATORY COMMISSION OF ALASKA

GCI COMMUNICATION CORP.

ACCESS SERVICES

17. Rates and Charges – Ketchikan (Cont'd)
    17.3 Special Access Service (Cont'd)

    17.3.3 Digital Data Service

Regulations concerning Digital Data Service are set forth in 7.5 preceding.

(A) Channel Termination per Termination	Monthly Rate	NRC	
- 2.4 kbps	$80.45	$353.00	(I)
- 4.8 kbps	$80.45	$353.00	(I)
- 9.6 kbps	$80.45	$353.00	(I)
- 19.2 kbps	$80.45	$353.00	(I)
- 56.0 kbps	$80.45	$353.00	(I)
- 64.0 kbps	$80.45	$353.00	(I)

(B) Channel Mileage

(1) Channel Mileage Facility per Mile per Month		(2) Channel Mileage Facility Termination per Month	
2.4 kbps thru 64.0	None	2.4 kbps thru 64.0	None

(C) Optional Features and Functions	Monthly Rate	
(1) Bridging per port	$7.91	(I)
(2) Loop Transfer Arrangement	$6.26	(I)

(D) Channel Service Unit, Per Termination		
- 2.4 kbps	$31.27	(N)
- 4.8 kbps	$31.27	(N)
- 9.6 kbps	$31.27	(N)
- 56.0 kbps	$31.27	(N)

Pursuant to:
U-07-52(8)

Effective: July 21, 2008

Issued by: GCI Communication Corp.

By: Jennifer K.G. Robertson

Title: Tariffs and Licenses Manager

RECEIVED
JUL 20 2009
STATE OF ALASKA
REGULATORY COMMISSION OF ALASKA

GCI COMMUNICATION CORP.

ACCESS SERVICES

17. Rates and Charges – Ketchikan (Cont'd)
    17.3 Special Access Service (Cont'd)

17.3.4 High Capacity Service
Regulations concerning High Capacity Service are set forth in 7.6 preceding.

(A) Channel Termination per Termination	Monthly Rate	NRC	
- 1.544 Mbps	$584.25	$378.00	(I)
- 3.152 Mbps	ICB	ICB	
- 6.312 Mbps	ICB	ICB	
- 44.736 Mbps	ICB	ICB	
- 274.175 Mbps	ICB	ICB	

(B) Channel Mileage

(1) Channel Mileage Facility per Mile	
- 1.544 Mbps	N/A
- 3.152 Mbps	N/A
- 6.312 Mbps	N/A
- 44.736 Mbps	N/A
- 274.175 Mbps	N/A

(2) Channel Mileage Termination per Termination	
- 1.544 Mbps	N/A
- 3.152 Mbps	N/A
- 6.312 Mbps	N/A
- 44.736 Mbps	N/A
- 274.175 Mbps	N/A

RECEIVED
JUN 04 2008
STATE OF ALASKA
REGULATORY COMMISSION OF ALASKA

GCI COMMUNICATION CORP.

ACCESS SERVICES

17. Rates and Charges – Ketchikan (Cont'd)
    17.3 Special Access Service (Cont'd)
        17.3.4 High Capacity Service (Cont'd)

(C) Optional Features and Functions

(1) Multiplexing, per arrangement		
- DS4 to DS1	ICB***	(I)
- DS3 to DS1	$477.57	
- DS2 to DS1	ICB***	
- DS1C to DS1	ICB***	
- DS1 to Voice*	$184.38	(I)
- DS1 to DS0	$184.38	(I)
- DS0 to twenty (20) 2.4 kbps	$392.68	(I)
- DS0 to ten (10) 4.8 kbps	$266.82	(I)
- DS0 to five (5) 9.6 kbps	$236.61	(I)
(2) Automatic Loop Transfer per arrangement**	$159.08	(I)
(2) Transfer Arrangement, 4 port	$173.39	(I)

* A channel of this DS1 to the Hub can be used for Digital Data service.
** An additional Channel Termination charge will apply whenever the spare line is provided as a leg to the customer designated premises.
*** All ICB rate elements are in the Additional Engineering section and tariffed equipment rate sections.

(D) Network Channel Terminating Equipment (NCTE), (N)

(1) Per Termination – 1.544 Mbps	$90.22	(N)
(2) Per Termination – Automatic Loop Transfer	$362.47	(N) (N)

Pursuant to:
U-07-52(8)

Effective: July 21, 2008

Issued by: GCI Communication Corp.

By: Jennifer K.G. Robertson Title: Tariffs and Licenses Manager

RECEIVED

APR 11 2014

STATE OF ALASKA
REGULATORY COMMISSION OF ALASKA

GCI COMMUNICATION CORP.

ACCESS SERVICES

17. Rates and Charges – Ketchikan (Cont'd)

17.4 Additional Engineering, Labor and Miscellaneous Service – Special Access (T)
Regulations Concerning Additional Engineering, Additional labor and Miscellaneous Services are set forth in 9 preceding.

17.4.1 The Charges for Additional Engineering:

(A) Basic Time, normally scheduled working hours per engineer (each half hour or fraction thereof) $27.19

(B) Overtime, outside of normally scheduled working hours per engineer (each half hour or fraction thereof) $40.79

(C) Premium Time, outside of scheduled work day per engineer (each half hour or fraction thereof) $54.38

17.4.2 The charges for Additional Labor:

(A) Installation and Repair

(1) Overtime, outside of normally scheduled working hours on a scheduled work day, per technician (each half hour or fraction thereof*) $32.90
(2) Premium Time, outside of normally scheduled working day, per technician (each half hour or fraction thereof*) $43.86

*A call-out of a Company employee at a time not consecutive with the employee's scheduled working period is subject to a minimum charge of four hours.

Pursuant to U-13-134(7) Effective: July 1, 2013

Issued by: GCI Communication Corp.

By: Cindy Hall Title: Tariffs and Licenses Manager

RECEIVED
JUN 04 2008
STATE OF ALASKA
REGULATORY COMMISSION OF ALASKA

GCI COMMUNICATION CORP.

ACCESS SERVICES

17. Rates and Charges – Ketchikan (Cont'd)
    17.4 Additional Engineering, Additional Labor and Miscellaneous Service (Cont'd)
        17.4.2 The charges for Additional Labor (Cont'd)

(B) Standby

(1) Basic Time, normally scheduled working hours, per technician (each half hour or fraction thereof*)	$21.67	(I)
(2) Overtime, outside of normally scheduled working hours on a scheduled work day, per technician (each half hour or fraction thereof*)	$32.51	(I)
(3) Premium time, outside of scheduled working day, per technician (each half hour or fraction thereof*)	$43.34	(I)

*A call-out of a Company employee at a time not consecutive with the employee's scheduled working period is subject to a minimum charge of four hours.

Pursuant to:
U-07-52(8)

Effective: July 21, 2008

Issued by: GCI Communication Corp.

By: Jennifer K.G. Robertson

Title: Tariffs and Licenses Manager

RECEIVED
JUN 04 2008
STATE OF ALASKA
REGULATORY COMMISSION OF ALASKA

GCI COMMUNICATION CORP.

ACCESS SERVICES

17. Rates and Charges – Ketchikan (Cont'd)
    17.3 Special Access Service (Cont'd)
        17.4.2 The Charges for Additional Labor (Cont'd)

(C) Testing and Maintenance with other telephone companies, or other labor.

(1) Installation and Repair

Basic Time - normally scheduled working hours, per technician (each half hour or fraction thereof*) $21.93

Overtime - outside of normally scheduled working hours on a scheduled work day, per technician (each half hour or fraction thereof*) $32.90

Premium Time - outside of scheduled work day per technician (each half hour of fraction thereof*) $43.86

(2) Central Office Maintenance

Basic Time - normally scheduled working hours, per technician (each half hour or fraction thereof*) $23.81

Overtime - outside of normally scheduled working hours on a scheduled work day, per technician (each half hour or fraction thereof*) $35.72

Premium Time - outside of scheduled work day per technician (each half hour of fraction thereof*) $47.62

*A call-out of a Company employee at a time not consecutive with the employee's scheduled working period is subject to a minimum charge of four hours.

Pursuant to:
U-07-52(8)

Effective: July 21, 2008

Issued by: GCI Communication Corp.

By: Jennifer K.G. Robertson

Title: Tariffs and Licenses Manager

RCA No. 489 Original Sheet No. 275.1

Canceling

Sheet No.

RECEIVED

APR 11 2014

STATE OF ALASKA
REGULATORY COMMISSION OF ALASKA

GCI COMMUNICATION CORP.

ACCESS SERVICES

17. Rates and Charges – Ketchikan (Cont'd)

17.5 Additional Engineering, Labor and Miscellaneous Service – Switched Access
Regulations Concerning Additional Engineering, Additional labor and Miscellaneous Services are set forth in 9 preceding. Each Half Hour, or Fraction Thereof.

17.5.1 The Charges for Engineering:	
(A) Basic Time, per engineer	$31.03
(B) Overtime, per engineer	$46.55
(C) Premium Time, per engineer	$62.06
17.5.2 Additional Labor Periods:*	
(A) Installation and Repair	
(1) Overtime, per technician	$47.57*
(2) Overtime, per technician	$63.42*
(B) Standby	
(1) Basic Time, per technician	$21.18*
(2) Overtime, per technician	$31.77*
(3) Premium Time, per technician	$42.36*
(C) Testing and Maintenance, Installation and Repair	
(1) Basic Time, per technician	$31.71
(2) Overtime, per technician	$47.57*
(3) Premium Time, per technician	$63.42*
(D) Central Office Maintenance, Technician	
(1) Basic Time, per technician	$34.66
(2) Overtime, per technician	$51.99*
(3) Premium Time, per technician	$69.32*

*A call-out of a Company employee at a time not consecutive with the employee's scheduled working period is subject to a minimum charge of four hours.

Pursuant to U-13-134(7) Effective: July 1, 2013

Issued by: GCI Communication Corp.

By: Shirley Brewer for Cindy Hall Title: Tariffs and Licenses Manager

RECEIVED
DEC 21 2018
STATE OF ALASKA
REGULATORY COMMISSION OF ALASKA

GCI COMMUNICATION CORP.

ACCESS SERVICES

18. Rates and Charges – Glacier State

18.1 Line Charges

a. Carrier Common Line (CCL) Rate

This charge is billed to AUSAC as described in section 3.7 preceding. (N) (D)

b. Network Access Fee (NAF) Rate

The total RCA NAF Rate is $5.75 per line per month.

c. Rural Telephone Bank (RTB) Refund Credit

The RTB Refund Credit is a line item applied to each customer's bill that is assessed a network Access Fee. The credit shall commence January 26, 2009, and will continue until the amount ordered by the Commission is exhausted, which is estimated to be six years.

RTB Refund Amount	$0.13 per line per month

RECEIVED
JUL 27 2017
STATE OF ALASKA
REGULATORY COMMISSION OF ALASKA

GCI COMMUNICATION CORP.

ACCESS SERVICES

18. Rates and Charges – Glacier State (Cont'd)

18.2 Switched Access Service

18.2.1 Nonrecurring Charges

	Rate	Reference	
(A) Access Order	$18.75	5.2	
(B) Service Date Change Charge	$8.51	5.8	
(C) Design Change Charge	$8.51	5.8	
(D) Miscellaneous Service Order Charge	$8.51	5.8	
(E) Entrance Facility - Installation DS1	$146.11		
Entrance Facility - Installation DS3	$165.41		
Direct Trunk Transport Activation	$182.30		(R)
(F) Interim NXX Translation Per Order	$43.96	6.8	
(G) Telecommunications Service Priority Charge Per Circuit	$55.00	9.3	

RECEIVED
JUN 29 2022
STATE OF ALASKA
REGULATORY COMMISSION OF ALASKA

GCI COMMUNICATION CORP.

ACCESS SERVICES

18. Rates and Charges – Glacier State (Cont'd)
    18.2 Switched Access Service
        18.2.2 Recurring Charges

		Rate	Reference	
(A)	Common Transport Per Minutes of Use – Orig Toll	$0.003164	6.8	
	Tandem Switched Transport Termination – Terminating To 3rd Party	$0.000641		
	Tandem Switched Transport Facility – Terminating to 3rd Party	$0.000124		
	Tandem Switching – Terminating to 3rd Party	$0.00		
	Tandem Switched Transport Termination – Terminating to End Office	$0.00		
	Tandem Switched Transport Facility – Terminating to End Office	$0.00		
	Tandem Switching – Terminating to End Office	$0.00		
	Joint Tandem Switched Transport – Orig Toll Free	$0.001		
(B)	Entrance Facility – DS1*	$94.08		
	Entrance Facility – DS3*	$829.27		
	Direct Trunk Transport Termination – DS1	$25.28		
	Direct Trunk Transport Termination – DS3	$162.34		
	Direct Trunk Transport Facility – DS1	$4.87		
	Direct Trunk Transport Facility – DS3	$42.44		
	Multiplexing – DS3 to DS1	$184.59		
	Multiplexing – DS1 to Voice	$71.27		
(C)	Local Switching Per Minutes of Use – Originating Toll	$0.009621	6.8	
	Local Switching Per Minutes of Use – Originating Toll Free	$0.002886	6.8	(R)
(D)	Information Surcharge Per 100 Minutes – Orig Toll	$0.031585	6.8	
	Information Surcharge Per 100 Minutes – Originating Toll Free	$0.00	6.8	

*The Entrance Facility charges specified in Section 6.2 of this tariff will not apply when: 1) the customer designated premises and the serving wire center are physically (including caged, cageless, shared and adjacent arrangements) or virtually collocated as those terms are used in 47 CFR 51.323, and 2) the customer obtains collocation for the purpose of interconnection with the Telephone Company's network for the transmission and routing of telephone exchange service, exchange access or both, and for the purpose of providing local exchange access services to its customers.

RECEIVED
JUN 29 2022
STATE OF ALASKA
REGULATORY COMMISSION OF ALASKA

GCI COMMUNICATION CORP.

ACCESS SERVICES

18. Rates and Charges – Glacier State (Cont'd)
    18.2 Switched Access Service (Cont'd)
        18.2.2 Recurring Charges (Cont'd)

	Rate	Reference	
(E) TSP Database Charge Per Circuit	$1.00	9.3	
(F) Toll Free Database Access Service Queries	$$0.002224	6.8	(R)
18.2.3 Equal Access Recovery Charge Monthly Rate per Presubscribed Equal Access Line	$0.089474	6.8	
18.2.4 Presubscription Change Charge Per Telephone Exchange Service Line or Trunk	$5.00	9.3	

18.2.5 Assumed Minutes of Use	Assumed Minutes Per Month	Tariff Section Reference
(A) Feature Group A, Two Way Calling (1510 Originating, 2685 Terminating)	4195	6.8
(B) Feature Group A, Originating Only	1510	6.8
(C) Feature Group A, Terminating Only	2685	6.8
(D) Feature Group B, Two Way Calling (3132 Originating, 5568 Terminating)	8700	6.8
(E) Feature Group B, Originating Only	3132	6.8
(F) Feature Group B, Terminating Only	5568	6.8

RCA No. 489 Original Sheet No. 279

Canceling

Sheet No.

RECEIVED
MAY 14 2007
STATE OF ALASKA
REGULATORY COMMISSION OF ALASKA

GCI COMMUNICATION CORP.

ACCESS SERVICES

18. Rates and Charges – Glacier State (Cont'd)

18.3 Special Access Service

Regulations concerning charges associated with Surcharge for Special Access Service are set forth in 7.3 preceding.

18.3.1a Surcharge Monthly Rate $25.00

18.3.1b Telecommunications Service Priority Charge
Regulations concerning charges associated with Surcharge for Miscellaneous Service are set forth in 9.3 preceding.

	Monthly	NRC
	$1.00	$55.00

18.3.1c Special Access Ordering
Regulations concerning charges associated with Access Ordering are set forth in 5.2 and 5.8 preceding

(A) Access Order Charge Per Order $82.00

(B) Service Date Change Charge $35.00
Service Date Change Charge will apply, on a per order per occurrence basis, for each service date changed. The Access Order Charge as specified in 143.1c(A) preceding does not apply.

(C) Design Change Charge $35.00
The Design Change Charge will apply on a per order per occurrence basis, for each order requiring design change.

(D) Miscellaneous Service Order Charge $35.00

Tariff Advice No. 401 Effective: June 28, 2007

Issued by: GCI Communication Corp.

By: Jennifer K.G. Robertson Title: Tariffs and Licenses Manager

RECEIVED
JUN 1 0 2011
STATE OF ALASKA
REGULATORY COMMISSION OF ALASKA

GCI COMMUNICATION CORP.

ACCESS SERVICES

18. Rates and Charges – Glacier State (Cont'd)
18.3 Special Access Service (Cont'd)

18.3.2 Voice Grade Service
Regulations concerning Voice Grade are set forth in 7.4 preceding.

	Monthly Rate	NRC	
(A) Channel Termination Per Termination*			(T)
Two-Wire	$27.99	$56.00	
Four-Wire	$45.48	$56.00	
(B) Channel Mileage			
(1) Channel Mileage Facility per Mile			
Two-Wire	$1.22		
Four-Wire	$1.22		
(2) Channel Mileage Termination per Term			
Two-Wire	$12.27		
Four-Wire	$12.27		

(C) Optional Features and Functions	Monthly Rate	
(1) Bridging		
(A) Voice Bridging per Port		
Two-Wire	$8.68	$101.76
Four-Wire	$8.68	$101.76
(B) Data Bridging per Port		
Two-Wire	$8.68	
Four-Wire	$8.68	

*The Channel Termination Charge Specified in Section 7.2.1(A) of this tariff will not apply when: 1) the customer designated premises and the serving wire center are physically (including caged, cageless, shared and adjacent arrangements) or virtually collocated as those terms are used in 47 CFR 51.323, and (2) the customer obtains collocation for the purpose of interconnection with the Telephone Company's network for the transmission and routing of telephone exchange service, exchange access or both, and for the purpose of providing local exchange or exchange access service to its customers. (N) (N)

Tariff Advice No. 552-489 Effective: July 25, 2011

Issued by: GCI Communication Corp.
By: Cynthia L. Lynch Title: Tariffs and Licenses Manager

RECEIVED
OCT 03 2008
STATE OF ALASKA
REGULATORY COMMISSION OF ALASKA

GCI COMMUNICATION CORP.

ACCESS SERVICES

18. Rates and Charges – Glacier State (Cont'd)
18.3 Special Access Service (Cont'd)
18.3.2 Voice Grade Service (Cont'd)
(C) Optional Features and Functions (Cont'd)

	Monthly Rate	NRC	
(2) Conditioning per Termination			
- C-Type	$4.23	$101.76	(R)
- Improved Attenuation Distortion	$4.23	$25.44	(R)
- Improved Envelope Delay Distortion	$4.23	$25.44	(R)
- Data Capability	$4.23	$152.64	(R)
- Telephoto Capability	$4.23	$203.52	(R)
			(D)
(3) Improved Return Loss per Termination			
- Effective Two-Wire	$0.92	$25.44	
- Effective Four-Wire	$0.92	$25.44	
(4) Customer Specified Receive Level per Two-Wire Termination	$8.00	$101.76	
			(D)
			(D)
(5) Signaling Capability per Termination	$5.52	$50.88	(C/R)
			(D)
			(D)
(6) Transfer Arrangement			
4 Port	$0.60	$50.88	
5 Port	$0.60	$50.88	

Tariff Advice No. 505-489 Effective: November 17, 2008

Issued by: GCI Communication Corp.

By: Jennifer K.G. Robertson Title: Tariffs and Licenses Manager

RECEIVED
JUN 10 2011
STATE OF ALASKA
REGULATORY COMMISSION OF ALASKA

GCI COMMUNICATION CORP.

ACCESS SERVICES

18. Rates and Charges – Glacier State (Cont'd)
18.3 Special Access Service (Cont'd)

18.3.3 Digital Data Service

Regulations concerning Digital Data Service are set forth in 7.5 preceding.

(A) Channel Termination per Termination*	Monthly Rate	NRC	(T)
- 2.4 kbps	$56.69	$144.56	
- 4.8 kbps	$56.69	$144.56	
- 9.6 kbps	$56.69	$144.56	
- 19.2 kbps	$56.69	$144.56	
- 56.0 kbps	$56.69	$144.56	
- 64.0 kbps	$68.11	$144.56	

(B) Channel Mileage

(1) Channel Mileage Facility per Mile per Month		(2) Channel Mileage Facility Termination per Month	
- 2.4 kbps	$2.44	- 2.4 kbps	$24.54
- 4.8 kbps	$2.44	- 4.8 kbps	$24.54
- 9.6 kbps	$2.44	- 9.6 kbps	$24.54
- 19.2 kbps	$2.44	- 19.2 kbps	$24.54
- 56.0 kbps	$2.44	- 56.0 kbps	$24.54
- 64.0 kbps	$2.44	- 64.0 kbps	$24.54

(C) Optional Features and Functions	Monthly Rate	NRC
(1) Bridging per port	$8.68	$101.76
(2) Loop Transfer Arrangement	None	

*The Channel Termination Charge Specified in Section 7.2.1(A) of this tariff will not apply when: 1) the customer designated premises and the serving wire center are physically (including caged, cageless, shared and adjacent arrangements) or virtually collocated as those terms are used in 47 CFR 51.323, and (2) the customer obtains collocation for the purpose of interconnection with the Telephone Company's network for the transmission and routing of telephone exchange service, exchange access or both, and for the purpose of providing local exchange or exchange access service to its customers. (N) (N)

Tariff Advice No. 552-489 Effective: July 25, 2011

Issued by: GCI Communication Corp.
By: Cynthia L. Lynch Title: Tariffs and Licenses Manager

RECEIVED
JUN 1 0 2011
STATE OF ALASKA
REGULATORY COMMISSION OF ALASKA

GCI COMMUNICATION CORP.

ACCESS SERVICES

18. Rates and Charges – Glacier State (Cont'd)
18.3 Special Access Service (Cont'd)

18.3.4 High Capacity Service
Regulations concerning High Capacity Service are set forth in 7.6 preceding.

(T)

(A) Channel Termination per Termination*	Monthly Rate	NRC
- 1.544 Mbps	$142.05	$332.74
(Per mile over 3 miles)	$20.07	
- 44.736 Mbps	$1,531.75	
(Per mile over 3 miles)	$150.54	

(B) Channel Mileage

(1) Channel Mileage Facility per Mile	
- 1.544 Mbps	$11.24
- 44.736 Mbps	$200.00
(2) Channel Mileage Termination per Termination	
- 1.544 Mbps	$52.13
- 44.736 Mbps	$500.00

*The Channel Termination Charge Specified in Section 7.2.1(A) of this tariff will not apply when: 1) the customer designated premises and the serving wire center are physically (including caged, cageless, shared and adjacent arrangements) or virtually collocated as those terms are used in 47 CFR 51.323, and (2) the customer obtains collocation for the purpose of interconnection with the Telephone Company's network for the transmission and routing of telephone exchange service, exchange access or both, and for the purpose of providing local exchange or exchange access service to its customers. (N) (N)

RECEIVED
NOV 0 4 2008
STATE OF ALASKA
REGULATORY COMMISSION OF ALASKA

GCI COMMUNICATION CORP.

ACCESS SERVICES

18. Rates and Charges – Glacier State (Cont'd)
    18.3 Special Access Service (Cont'd)
        18.3.4 High Capacity Service (Cont'd)

(C) Optional Features and Functions	Monthly Rate	NRC	
(1) Multiplexing, per arrangement			(D)
- DS3 to DS1	$385.00		(D)
			(D)
- DS1 to Voice*	$71.70	$91.20	(R)
			(D)
			(D)
			(D)
			(D)
(2) Automatic Loop Transfer per arrangement**	$8.85		
(3) Transfer Arrangement, 4 port	None		
(4) Synchronization	ICB		

* A channel of this DS1 to the Hub can be used for Digital Data service.
** An additional Channel Termination charge will apply whenever the spare line is provided as a leg to the customer designated premises.

Tariff Advice No. 505-489 Effective: November 17, 2008

Issued by: GCI Communication Corp.
By: Jennifer K.G. Robertson Title: Tariffs and Licenses Manager

RECEIVED

MAY 14 2007

STATE OF ALASKA
REGULATORY COMMISSION OF ALASKA

GCI COMMUNICATION CORP.

ACCESS SERVICES

18. Rates and Charges – Glacier State (Cont'd)

18.4 Additional Engineering, Additional Labor and Miscellaneous Service
Regulations Concerning Additional Engineering, Additional labor and Miscellaneous Services are set forth in 9 preceding.

18.4.1 The Charges for Additional Engineering:

(A) Basic Time, normally scheduled working hours per engineer (each half hour or fraction thereof) $59.87

(B) Overtime, outside of normally scheduled working hours per engineer (each half hour or fraction thereof) $72.95

(C) Premium Time, outside of scheduled work day per engineer (each half hour or fraction thereof) $86.03

18.4.2 The charges for Additional Labor:

(A) Installation and Repair

(1) Overtime, outside of normally scheduled working hours on a scheduled work day, per technician (each half hour or fraction thereof*) $61.71
(2) Premium Time, outside of normally scheduled working day, per technician (each half hour or fraction thereof*) $72.74

*A call-out of a Company employee at a time not consecutive with the employee's scheduled working period is subject to a minimum charge of four hours.

Tariff Advice No. 401 Effective: June 28, 2007

Issued by: GCI Communication Corp.

By: Jennifer K.G. Robertson Title: Tariffs and Licenses Manager

RECEIVED
MAY 14 2007
STATE OF ALASKA
REGULATORY COMMISSION OF ALASKA

GCI COMMUNICATION CORP.

ACCESS SERVICES

18. Rates and Charges – Glacier State (Cont'd)
    18.4 Additional Engineering, Additional Labor and Miscellaneous Service (Cont'd)
        18.4.2 The charges for Additional Labor (Cont'd)

(B) Standby

(1) Basic Time, normally scheduled working hours, per technician (each half hour or fraction thereof*)	$50.69
(2) Overtime, outside of normally scheduled working hours on a scheduled work day, per technician (each half hour or fraction thereof*)	$61.71
(3) Premium time, outside of scheduled working day, per technician (each half hour or fraction thereof*)	$72.74

*A call-out of a Company employee at a time not consecutive with the employee's scheduled working period is subject to a minimum charge of four hours.

RECEIVED

MAY 14 2007

STATE OF ALASKA
REGULATORY COMMISSION OF ALASKA

GCI COMMUNICATION CORP.

ACCESS SERVICES

18. Rates and Charges – Glacier State (Cont'd)
    18.3 Special Access Service (Cont'd)
        18.4.2 The Charges for Additional Labor (Cont'd)

(C) Testing and Maintenance with other telephone companies, or other labor.

(1) Installation and Repair

Basic Time - normally scheduled working hours, per technician (each half hour or fraction thereof*) $50.69

Overtime - outside of normally scheduled working hours on a scheduled work day, per technician (each half hour or fraction thereof*) $61.71

Premium Time - outside of scheduled work day per technician (each half hour of fraction thereof*) $72.74

(2) Central Office Maintenance

Basic Time - normally scheduled working hours, per technician (each half hour or fraction thereof*) $50.69

Overtime - outside of normally scheduled working hours on a scheduled work day, per technician (each half hour or fraction thereof*) $61.71

Premium Time - outside of scheduled work day per technician (each half hour of fraction thereof*) $72.74

*A call-out of a Company employee at a time not consecutive with the employee's scheduled working period is subject to a minimum charge of four hours.

Tariff Advice No. 401 Effective: June 28, 2007

Issued by: GCI Communication Corp.

By: Jennifer K.G. Robertson Title: Tariffs and Licenses Manager

RECEIVED
DEC 21 2018
STATE OF ALASKA
REGULATORY COMMISSION OF ALASKA

GCI COMMUNICATION CORP.

ACCESS SERVICES

19. Rates and Charges – Seward

GCI is currently providing service in the Seward Exchanges only. (As defined on Sheet No. 39.) All other exchanges in this service area are not being serviced at this time.

19.1 Line Charges

a. Carrier Common Line (CCL) Rate

This charge is billed to AUSAC as described in section 3.7 preceding. (N)
(D)
(D)

(D)

b. Network Access Fee (NAF) Rate

The total RCA NAF Rate is $5.75 per line per month.

RECEIVED
JUN 29 2022
STATE OF ALASKA
REGULATORY COMMISSION OF ALASKA

GCI COMMUNICATION CORP.

ACCESS SERVICES

19. Rates and Charges – Seward (Cont'd)

19.2 Switched Access Service

19.2.1 Nonrecurring Charges

	Rate	Reference	
(A) Access Order	$86.00	5.2	
(B) Service Date Change Charge	$60.00	5.8	
(C) Design Change Charge	$84.00	5.8	
(D) Miscellaneous Service Order Charge	$123.00	5.8	
(E) Entrance Facility Installation – DS1	$357.16		(I)
Entrance Facility Installation – DS3	$481.61		
Trunk Activation per order	$496.75		(I)
(F) Interim NXX Translation Per Order	$238.10	6.8	(I)
(G) Telecommunications Service Priority Charge Per Circuit	$54.63	9.3	

RECEIVED
JUN 29 2022
STATE OF ALASKA
REGULATORY COMMISSION OF ALASKA

GCI COMMUNICATION CORP.

ACCESS SERVICES

19. Rates and Charges – Seward (Cont'd)

19.2.2 Recurring Charges

	Rate	Reference	
(A) Common Transport Per Minutes of Use- Orig Toll	N/A	6.8	
Terminating Tandem Switched Transport Termination -per access minute	$0.000000		
Terminating Tandem Switched Transport Facility - -per access minute per mile	$0.000000		
Terminating Tandem Switching – per access minute	$0.000000		
Joint Tandem Switched Transport – Orig Toll Free	N/A		
(B) Entrance Facility, per termination – DS1	$231.90		(I)
Entrance Facility, per termination – DS3	$2,117.37		(I)
Direct Trunked Transport			
Direct Trunked Termination – DS1	$82.43		(I)
Direct Trunked Termination – DS3	$529.32		(I)
Direct Trunked Facility – DS1	$15.89		(I)
Direct Trunked Facility – DS3	$138.41		(I)
(C) Multiplexing, per arrangement – DS3 to DS1	$482.96		(I)
Multiplexing, per arrangement – DS1 to Voice	$186.46		(I)
(D) Local Switching (Per Minutes of Use) – Originating Toll	$0.00	6.8	
Local Switching (Per Minutes of Use) – Originating Toll Free	$0.00	6.8	
(E) Information Surcharge Per 100 Minutes – Originating Toll	$0.00	6.8	
Information Surcharge Per 100 Minutes - Originating Toll Free	$0.00	6.8	

RECEIVED
JUN 29 2022
STATE OF ALASKA
REGULATORY COMMISSION OF ALASKA

GCI COMMUNICATION CORP.

ACCESS SERVICES

19. Rates and Charges – Seward (Cont'd)
19.2 Switched Access Service (Cont'd)
19.2.2 Recurring Charges (Cont'd)

	Rate	Reference	
(F) TSP Database Charge Per Circuit	$1.00	9.3	
(G) Toll Free Database Access Service Queries	$$0.002224	6.8	(R)
19.2.3 Equal Access Recovery Charge Monthly Rate per Presubscribed Equal Access Line	$0.00	6.8	
19.2.4 Presubscription Change Charge Submitted using manual methods	$5.50	9.3	
Submitted using manual methods when both the interLATA PIC and intraLATA PIC selections are changed simultaneously	$2.75	9.3	

19.2.5 Assumed Minutes of Use	Assumed Minutes Per Month	Tariff Section Reference
(A) Feature Group A, Two Way Calling (1510 Originating, 2685 Terminating)	4195	6.8
(B) Feature Group A, Originating Only	1510	6.8
(C) Feature Group A, Terminating Only	2685	6.8
(D) Feature Group B, Two Way Calling (3132 Originating, 5568 Terminating)	8700	6.8
(E) Feature Group B, Originating Only	3132	6.8
(F) Feature Group B, Terminating Only	5568	6.8

RECEIVED
DEC 0 4 2008
STATE OF ALASKA
REGULATORY COMMISSION OF ALASKA

GCI COMMUNICATION CORP.

ACCESS SERVICES

19. Rates and Charges – Seward (Cont'd)

19.3 Special Access Service

Regulations concerning charges associated with Surcharge for Special Access Service are set forth in 7.3 preceding.

19.3.1a Surcharge Monthly Rate $25.00

19.3.1b Telecommunications Service Priority Charge
Regulations concerning charges associated with Surcharge for Miscellaneous Service are set forth in 9.3 preceding.

Monthly	NRC
$1.00	$55.00

19.3.1c Special Access Ordering
Regulations concerning charges associated with Access Ordering are set forth in 5.2 and 5.8 preceding

(A) Access Order Charge Per Order $97.00 (I)

(B) Service Date Change Charge $44.00
Service Date Change Charge will apply, on a per order per occurrence basis, for each service date changed. The Access Order Charge as specified in 143.1c(A) preceding does not apply.

(C) Design Change Charge $44.00
The Design Change Charge will apply on a per order per occurrence basis, for each order requiring design change.

(D) Miscellaneous Service Order Charge $44.00

Pursuant to:
U-08-151(1)

Effective: December 20, 2008

Issued by: GCI Communication Corp.

By: Jennifer K G Robertson Title: Tariffs and Licenses Manager

RECEIVED
OCT 0 2 2009
STATE OF ALASKA
REGULATORY COMMISSION OF ALASKA

GCI COMMUNICATION CORP.

ACCESS SERVICES

19. Rates and Charges – Seward (Cont'd)
19.3 Special Access Service (Cont'd)

19.3.2 Voice Grade Service
Regulations concerning Voice Grade are set forth in 7.4 preceding.

	Monthly Rate	NRC	
(A) Channel Termination Per Termination			
Two-Wire	$93.73	$325.00	(R)
Four-Wire	$149.96	$325.00	(R)
(B) Channel Mileage			
(1) Channel Mileage Facility per Mile			
Two-Wire	N/A		
Four-Wire	N/A		
(2) Channel Mileage Termination per Term			
Two-Wire	N/A		
Four-Wire	N/A		

(C) Optional Features and Functions	Monthly Rate	
(1) Bridging		
(A) Voice Bridging per Port		
Two-Wire	ICB	ICB
Four-Wire	ICB	ICB
(B) Data Bridging per Port		
Two-Wire	ICB	
Four-Wire	ICB	

Issued by: GCI Communication Corp.
By: Jennifer K.G. Robertson Title: Tariffs and Licenses Manager

RECEIVED
SEP 2 4 2009
STATE OF ALASKA
REGULATORY COMMISSION OF ALASKA

GCI COMMUNICATION CORP.

ACCESS SERVICES

19. Rates and Charges – Seward (Cont'd)
19.3 Special Access Service (Cont'd)
19.3.2 Voice Grade Service (Cont'd)
(C) Optional Features and Functions (Cont'd)

	Monthly Rate	NRC	
(2) Conditioning per Termination			
- C-Type	$15.46	ICB	(R)
- Improved Attenuation Distortion	ICB	ICB	
- Improved Envelope Delay Distortion	ICB	ICB	
- Data Capability	$10.62	ICB	(R)
- Telephoto Capability	ICB	ICB	
- Sealing Current	ICB		
(3) Improved Return Loss per Termination			
- Effective Two-Wire	$27.47	ICB	(R)
- Effective Four-Wire	$27.47	ICB	(R)
(4) Customer Specified Receive Level per Two-Wire Termination	$18.89	ICB	(R)
(5) Multiplexing, per Arrangement Voice to Telegraph Grade	ICB	ICB	
(6) Signaling Capability per Termination	$27.81	ICB	(R)
(7) Selective Signaling Arrangement, per Arrangement	$13.95	ICB	(R)
(8) Transfer Arrangement			
4 Port	ICB	ICB	
5 Port	ICB	ICB	

RECEIVED
SEP 2 4 2009
STATE OF ALASKA
REGULATORY COMMISSION OF ALASKA

GCI COMMUNICATION CORP.

ACCESS SERVICES

19. Rates and Charges – Seward (Cont'd)
19.3 Special Access Service (Cont'd)

19.3.3 Digital Data Service

Regulations concerning Digital Data Service are set forth in 7.5 preceding.

(A) Channel Termination per Termination	Monthly Rate	NRC	
- 2.4 kbps	$172.98	$353.00	(R)
- 4.8 kbps	$172.98	$353.00	
- 9.6 kbps	$172.98	$353.00	
- 19.2 kbps	$172.98	$353.00	
- 56.0 kbps	$172.98	$353.00	
- 64.0 kbps	$172.98	$353.00	(R)

(B) Channel Mileage

(1) Channel Mileage Facility per Mile per Month		(2) Channel Mileage Facility Termination per Month	
- 2.4 kbps	ICB	- 2.4 kbps	ICB
- 4.8 kbps	ICB	- 4.8 kbps	ICB
- 9.6 kbps	ICB	- 9.6 kbps	ICB
- 19.2 kbps	ICB	- 19.2 kbps	ICB
- 56.0 kbps	ICB	- 56.0 kbps	ICB
- 64.0 kbps	ICB	- 64.0 kbps	ICB

(C) Optional Features and Functions	Monthly Rate	NRC
(1) Bridging per port	ICB	ICB
(2) Loop Transfer Arrangement	ICB	

Tariff Advice No. 530 Effective: November 9, 2009

Issued by: GCI Communication Corp.
By: Jennifer KG Robertson Title: Tariffs and Licenses Manager

RECEIVED
OCT 0 2 2009
STATE OF ALASKA
REGULATORY COMMISSION OF ALASKA

GCI COMMUNICATION CORP.

ACCESS SERVICES

19. Rates and Charges – Seward (Cont'd)
    19.3 Special Access Service (Cont'd)
        19.3.3 Digital Data Service

(N)

Regulations concerning Digital Data Service are set forth in 7.5 preceding.

(D) Channel Service Unit Per Termination	Monthly Rate	NRC
- 2.4 kbps	$66.69	ICB
- 4.8 kbps	$66.69	ICB
- 9.6 kbps	$66.69	ICB
- 56.0 kbps	$66.69	ICB

(N)

RECEIVED
SEP 2 4 2009
STATE OF ALASKA
REGULATORY COMMISSION OF ALASKA

GCI COMMUNICATION CORP.

ACCESS SERVICES

19. Rates and Charges – Seward (Cont'd)
19.3 Special Access Service (Cont'd)

19.3.4 High Capacity Service
Regulations concerning High Capacity Service are set forth in 7.6 preceding.

(A) Channel Termination per Termination	Monthly Rate	NRC	
- 1.544 Mbps	$490.50	$378.00	(R)
- 3.152 Mbps	ICB	ICB	
- 6.312 Mbps	ICB	ICB	
- 44.736 Mbps	ICB	ICB	
- 274.175 Mbps	ICB	ICB	

(B) Channel Mileage

(1) Channel Mileage Facility per Mile	
- 1.544 Mbps	None
- 3.152 Mbps	None
- 6.312 Mbps	None
- 44.736 Mbps	None
- 274.175 Mbps	None

(2) Channel Mileage Termination per Termination	
- 1.544 Mbps	None
- 3.152 Mbps	None
- 6.312 Mbps	None
- 44.736 Mbps	None
- 274.175 Mbps	None

RECEIVED
SEP 2 4 2009
STATE OF ALASKA
REGULATORY COMMISSION OF ALASKA

GCI COMMUNICATION CORP.

ACCESS SERVICES

19. Rates and Charges – Seward (Cont'd)
19.3 Special Access Service (Cont'd)
19.3.4 High Capacity Service (Cont'd)

(C) Optional Features and Functions	Monthly Rate	NRC	
(1) Multiplexing, per arrangement			
- DS4 to DS1	None		
- DS3 to DS1	None		
- DS2 to DS1	None		
- DS1C to DS1	None		
- DS1 to Voice*	$393.21	ICB	(R)
- DS1 to DS0	$393.21	ICB	
- DS0 to twenty (20) 2.4 kbps	$837.39	ICB	
- DS0 to ten (10) 4.8 kbps	$569.02	ICB	
- DS0 to five (5) 9.6 kbps	$504.60	ICB	(R)
(2) Automatic Loop Transfer per arrangement**	$339.25	ICB	(R)
(3) Transfer Arrangement, 4 port	None		
(4) Synchronization	ICB		

* A channel of this DS1 to the Hub can be used for Digital Data service.
** An additional Channel Termination charge will apply whenever the spare line is provided as a leg to the customer designated premises.

Tariff Advice No. 530 Effective: November 9, 2009

Issued by: GCI Communication Corp.

By: Jennifer K G Robertson Title: Tariffs and Licenses Manager

RECEIVED

APR 11 2014

STATE OF ALASKA
REGULATORY COMMISSION OF ALASKA

GCI COMMUNICATION CORP.

ACCESS SERVICES

19. Rates and Charges – Seward (Cont'd)

19.4 Additional Engineering, Labor and Miscellaneous Service – Special Access (T)
Regulations Concerning Additional Engineering, Additional labor and Miscellaneous Services are set forth in 9 preceding.

19.4.1 The Charges for Additional Engineering:

(A) Basic Time, normally scheduled working hours per engineer (each half hour or fraction thereof*) $57.99

(B) Overtime, outside of normally scheduled working hours per engineer (each half hour or fraction thereof*) $86.99

(C) Premium Time, outside of scheduled work day per engineer (each half hour or fraction thereof*) $115.97

19.4.2 The charges for Additional Labor:

(A) Installation and Repair

(1) Overtime, outside of normally scheduled working hours on a scheduled work day, per technician (each half hour or fraction thereof*) $70.16
(2) Premium Time, outside of normally scheduled working day, per technician (each half hour or fraction thereof*) $93.54

*A call-out of a Company employee at a time not consecutive with the employee's scheduled working period is subject to a minimum charge of four hours.

Pursuant to U-13-134(7) Effective: July 1, 2013

Issued by: GCI Communication Corp.

By: Philip Dieser for Cindy Hall Title: Tariffs and Licenses Manager

RECEIVED
SEP 2 4 2009
STATE OF ALASKA
REGULATORY COMMISSION OF ALASKA

GCI COMMUNICATION CORP.

ACCESS SERVICES

19. Rates and Charges – Seward (Cont'd)
    19.4 Additional Engineering, Additional Labor and Miscellaneous Service (Cont'd)
        19.4.2 The charges for Additional Labor (Cont'd)

(B) Standby

(1) Basic Time, normally scheduled working hours per engineer (each half hour or fraction thereof*) $46.21 (R)

(2) Overtime, outside of normally scheduled working hours per engineer (each half hour or fraction thereof*) $70.16

(3) Premium Time, outside of scheduled work day per engineer (each half hour or fraction thereof*) $93.54 (R)

*A call-out of a Company employee at a time not consecutive with the employee's scheduled working period is subject to a minimum charge of four hours.

RECEIVED
OCT 0 2 2009
STATE OF ALASKA
REGULATORY COMMISSION OF ALASKA

GCI COMMUNICATION CORP.

ACCESS SERVICES

19. Rates and Charges – Seward (Cont'd)
    19.3 Special Access Service (Cont'd)
        19.4.2 The Charges for Additional Labor (Cont'd)

(C) Testing and Maintenance with other telephone companies, or other labor.

(1) Installation and Repair

Basic Time, normally scheduled working hours per engineer (each half hour or fraction thereof*)	$46.21	(R)
Overtime, outside of normally scheduled working hours per engineer (each half hour or fraction thereof*)	$70.16	
Premium Time, outside of scheduled work day per engineer (each half hour or fraction thereof*)	$93.54	

(2) Central Office Maintenance

Basic Time, normally scheduled working hours per engineer (each half hour or fraction thereof*)	$46.21	
Overtime, outside of normally scheduled working hours per engineer (each half hour or fraction thereof*)	$70.16	
Premium Time, outside of scheduled work day per engineer (each half hour or fraction thereof*)	$93.54	(R)

*A call-out of a Company employee at a time not consecutive with the employee's scheduled working period is subject to a minimum charge of four hours.

Tariff Advice No. 530 Effective: November 9, 2009

Issued by: GCI Communication Corp.
By: Jennifer K.G. Robertson Title: Tariffs and Licenses Manager

RCA No. 489 Original Sheet No. 299.1

Canceling

Sheet No.

RECEIVED
APR 11 2014
STATE OF ALASKA
REGULATORY COMMISSION OF ALASKA

GCI COMMUNICATION CORP.

ACCESS SERVICES

22. Rates and Charges – Seward (Cont'd)

22.5 Additional Engineering, Labor and Miscellaneous Service – Switched Access
Regulations Concerning Additional Engineering, Additional labor and Miscellaneous Services are set forth in 9 preceding. Each Half Hour, or Fraction Thereof.

21.5.1 The Charges for Engineering:	
(A) Basic Time, per engineer	$31.03
(B) Overtime, per engineer	$46.55
(C) Premium Time, per engineer	$62.06
21.5.2 Additional Labor Periods:*	
(A) Installation and Repair	
(1) Overtime, per technician	$47.57*
(2) Overtime, per technician	$63.42*
(B) Standby	
(1) Basic Time, per technician	$21.18*
(2) Overtime, per technician	$31.77*
(3) Premium Time, per technician	$42.36*
(C) Testing and Maintenance, Installation and Repair	
(1) Basic Time, per technician	$31.71
(2) Overtime, per technician	$47.57*
(3) Premium Time, per technician	$63.42*
(D) Central Office Maintenance, Technician	
(1) Basic Time, per technician	$34.66
(2) Overtime, per technician	$51.99*
(3) Premium Time, per technician	$69.32*

*A call-out of a Company employee at a time not consecutive with the employee's scheduled working period is subject to a minimum charge of four hours.

Pursuant to U-13-134(7) Effective: July 1, 2013

Issued by: GCI Communication Corp.

By: Christy Thomas for Cindy Hall Title: Tariffs and Licenses Manager

RECEIVED
DEC 21 2018
STATE OF ALASKA
REGULATORY COMMISSION OF ALASKA

GCI COMMUNICATION CORP.

ACCESS SERVICES

20. Rates and Charges – Sitka

20.1 Line Charges

a. Carrier Common Line (CCL) Rate

This charge is billed to AUSAC as described in section 3.7 preceding. (N) (D)

b. Network Access Fee (NAF) Rate

The total RCA NAF Rate is $5.75 per line per month.

c. Rural Telephone Bank (RTB) Refund Credit

The RTB Refund Credit is a line item applied to each customer's bill that is assessed a network Access Fee. The credit shall commence January 26, 2009, and will continue until the amount ordered by the Commission is exhausted, which is estimated to be six years.

RTB Refund Amount $0.13 per line per month

RECEIVED
JUL 27 2017
STATE OF ALASKA
REGULATORY COMMISSION OF ALASKA

GCI COMMUNICATION CORP.

ACCESS SERVICES

20. Rates and Charges – Sitka (Cont'd)

20.2 Switched Access Service

20.2.1 Nonrecurring Charges

		Rate	Reference	
(A)	Access Order	$24.58	5.2	
(B)	Service Date Change Charge	$11.15	5.8	
(C)	Design Change Charge	$11.15	5.8	
(D)	Miscellaneous Service Order Charge	$11.15	5.8	
(E)	Entrance Facility Installation – DS1 Entrance Facility Installation – DS3 Direct Trunk Transport Activation	$164.75 $222.42 $177.76		(R)
(F)	Interim NXX Translation Per Order	$43.96	6.8	
(G)	Telecommunications Service Priority Charge Per Circuit	$55.00	9.3	

RECEIVED
JUN 29 2022
STATE OF ALASKA
REGULATORY COMMISSION OF ALASKA

GCI COMMUNICATION CORP.

ACCESS SERVICES

20. Rates and Charges – Sitka (Cont'd)

20.2 Switched Access Service

20.2.2 Recurring Charges

		Rate	Reference	
(A)	Entrance Facility – DS1*	$61.93		
	Entrance Facility – DS3*	$565.12		
	Direct Trunk Transport Termination – DS1	$32.91		
	Direct Trunk Transport Termination – DS3	$211.35		
	Direct Trunk Transport Facility – DS1	$6.34		
	Direct Trunk Transport Facility – DS3	$55.26		
(B)	Multiplexing – DS3 to DS1	$242.03		
	Multiplexing – DS1 to Voice	$93.44		
(C)	Local Switching Per Minutes of Use – Originating Toll	$0.016845	6.8	
	Local Switching Per Minutes of Use – Originating Toll Free	$0.003517	6.8	(R)
(D)	Information Surcharge Per 100 Minutes – Orig Toll	$0.014438	6.8	
	Information Surcharge Per 100 Minutes – Originating Toll Free	$0.00	6.8	

*The Entrance Facility charges specified in Section 6.2 of this tariff will not apply when: 1) the customer designated premises and the serving wire center are physically (including caged, cageless, shared and adjacent arrangements) or virtually collocated as those terms are used in 47 CFR 51.323, and 2) the customer obtains collocation for the purpose of interconnection with the Telephone Company's network for the transmission and routing of telephone exchange service, exchange access or both, and for the purpose of providing local exchange access services to its customers.

RECEIVED
JUN 29 2022
STATE OF ALASKA
REGULATORY COMMISSION OF ALASKA

GCI COMMUNICATION CORP.

ACCESS SERVICES

20. Rates and Charges – Sitka (Cont'd)
20.2 Switched Access Service (Cont'd)
20.2.2 Recurring Charges (Cont'd)

	Rate	Reference	
(E) TSP Database Charge Per Circuit	$1.00	9.3	
(F) Toll Free Database Access Service Queries	$0.002224	6.8	(R)
20.2.3 Equal Access Recovery Charge Monthly Rate per Presubscribed Equal Access Line	$0.00	6.8	
20.2.4 Presubscription Change Charge Per Telephone Exchange Service Line or Trunk	$5.00	9.3	

20.2.5 Assumed Minutes of Use

	Assumed Minutes Per Month	Tariff Section Reference
(A) Feature Group A, Two Way Calling (1510 Originating, 2685 Terminating)	4195	6.8
(B) Feature Group A, Originating Only	1510	6.8
(C) Feature Group A, Terminating Only	2685	6.8
(D) Feature Group B, Two Way Calling (3132 Originating, 5568 Terminating)	8700	6.8
(E) Feature Group B, Originating Only	3132	6.8
(F) Feature Group B, Terminating Only	5568	6.8

RCA No. 489 Original Sheet No. 303

Canceling

Sheet No.

RECEIVED
AUG 14 2007
STATE OF ALASKA
REGULATORY COMMISSION OF ALASKA

GCI COMMUNICATION CORP.

ACCESS SERVICES

20. Rates and Charges – Sitka (Cont'd)

20.3 Special Access Service

Regulations concerning charges associated with Surcharge for Special Access Service are set forth in 7.3 preceding.

20.3.1a Surcharge Monthly Rate $25.00

20.3.1b Telecommunications Service Priority Charge
Regulations concerning charges associated with Surcharge for Miscellaneous Service are set forth in 9.3 preceding.

	Monthly	NRC
	$1.00	$55.00

20.3.1c Special Access Ordering
Regulations concerning charges associated with Access Ordering are set forth in 5.2 and 5.8 preceding

(A) Access Order Charge Per Order $82.00

(B) Service Date Change Charge $35.00
Service Date Change Charge will apply, on a per order per occurrence basis, for each service date changed. The Access Order Charge as specified in 143.1c(A) preceding does not apply.

(C) Design Change Charge $35.00
The Design Change Charge will apply on a per order per occurrence basis, for each order requiring design change.

(D) Miscellaneous Service Order Charge $35.00

Tariff Advice No. 429 Effective: October 1, 2007

Issued by: GCI Communication Corp.

By: Jennifer K.G. Bartlett Title: Tariffs and Licenses Manager

RECEIVED
JUN 10 2011
STATE OF ALASKA
REGULATORY COMMISSION OF ALASKA

GCI COMMUNICATION CORP.

ACCESS SERVICES

20. Rates and Charges – Sitka (Cont'd)
20.3 Special Access Service (Cont'd)

20.3.2 Voice Grade Service
Regulations concerning Voice Grade are set forth in 7.4 preceding.

	Monthly Rate	NRC	
(A) Channel Termination Per Termination*			(T)
Two-Wire	$42.66	$56.00	
Four-Wire	$69.32	$56.00	
(B) Channel Mileage			
(1) Channel Mileage Facility per Mile			
Two-Wire	$1.87		
Four-Wire	$1.87		
(2) Channel Mileage Termination per Term			
Two-Wire	$18.71		
Four-Wire	$18.71		

(C) Optional Features and Functions	Monthly Rate	
(1) Bridging		
(A) Voice Bridging per Port		
Two-Wire	$8.68	$101.76
Four-Wire	$8.68	$101.76
(B) Data Bridging per Port		
Two-Wire	$8.68	
Four-Wire	$8.68	

*The Channel Termination Charge Specified in Section 7.2.1(A) of this tariff will not apply when: 1) the customer designated premises and the serving wire center are physically (including caged, cageless, shared and adjacent arrangements) or virtually collocated as those terms are used in 47 CFR 51.323, and (2) the customer obtains collocation for the purpose of interconnection with the Telephone Company's network for the transmission and routing of telephone exchange service, exchange access or both, and for the purpose of providing local exchange or exchange access service to its customers. (N) (N)

Tariff Advice No. 552-489 Effective: July 25, 2011

Issued by: GCI Communication Corp.
By: Cynthia L. Lynch Title: Tariffs and Licenses Manager

RCA No. 489 2nd Revised Sheet No. 305

Canceling

1st Revised Sheet No. 305

RECEIVED
OCT 03 2008
STATE OF ALASKA
REGULATORY COMMISSION OF ALASKA

GCI COMMUNICATION CORP.

ACCESS SERVICES

20. Rates and Charges – Sitka (Cont'd)
20.3 Special Access Service (Cont'd)
20.3.2 Voice Grade Service (Cont'd)
(C) Optional Features and Functions (Cont'd)

	Monthly Rate	NRC	
(2) Conditioning per Termination			
- C-Type	$6.44	$101.76	(I)
- Improved Attenuation Distortion	$6.44	$25.44	(I)
- Improved Envelope Delay Distortion	$6.44	$25.44	(I)
- Data Capability	$6.44	$152.64	(I)
- Telephoto Capability	$6.44	$203.52	(I)
			(D)
(3) Improved Return Loss per Termination			
- Effective Two-Wire	$0.92	$25.44	
- Effective Four-Wire	$0.92	$25.44	
(4) Customer Specified Receive Level per Two-Wire Termination	$8.00	$101.76	
			(D)
			(D)
(5) Signaling Capability per Termination	$8.41	$50.88	(C/I)
			(D)
			(D)
(6) Transfer Arrangement			(C)
4 Port	$0.60	$50.88	
5 Port	$0.60	$50.88	

Tariff Advice No. 504 Effective: November 17, 2008

Issued by: GCI Communication Corp.

By: Jennifer K.G. Robertson Title: Tariffs and Licenses Manager

RECEIVED
JUN 1 0 2011
STATE OF ALASKA
REGULATORY COMMISSION OF ALASKA

GCI COMMUNICATION CORP.

ACCESS SERVICES

20. Rates and Charges – Sitka (Cont'd)
20.3 Special Access Service (Cont'd)

20.3.3 Digital Data Service

Regulations concerning Digital Data Service are set forth in 7.5 preceding.

(A) Channel Termination per Termination*	Monthly Rate	NRC	(T)
- 2.4 kbps	$86.40	$144.56	
- 4.8 kbps	$86.40	$144.56	
- 9.6 kbps	$86.40	$144.56	
- 19.2 kbps	$86.40	$144.56	
- 56.0 kbps	$86.40	$144.56	
- 64.0 kbps	$103.81	$144.56	

(B) Channel Mileage

(1) Channel Mileage Facility per Mile per Month		(2) Channel Mileage Facility Termination per Month	
- 2.4 kbps	$3.72	- 2.4 kbps	$37.40
- 4.8 kbps	$3.72	- 4.8 kbps	$37.40
- 9.6 kbps	$3.72	- 9.6 kbps	$37.40
- 19.2 kbps	$3.72	- 19.2 kbps	$37.40
- 56.0 kbps	$3.72	- 56.0 kbps	$37.40
- 64.0 kbps	$3.72	- 64.0 kbps	$37.40

(C) Optional Features and Functions	Monthly Rate	NRC
(1) Bridging per port	$8.68	$101.76

*The Channel Termination Charge Specified in Section 7.2.1(A) of this tariff will not apply when: 1) the customer designated premises and the serving wire center are physically (including caged, cageless, shared and adjacent arrangements) or virtually collocated as those terms are used in 47 CFR 51.323, and (2) the customer obtains collocation for the purpose of interconnection with the Telephone Company's network for the transmission and routing of telephone exchange service, exchange access or both, and for the purpose of providing local exchange or exchange access service to its customers. (N) (N)

Tariff Advice No. 552-489 Effective: July 25, 2011

Issued by: GCI Communication Corp.
By: Cynthia L. Lynch Title: Tariffs and Licenses Manager

RECEIVED
JUN 1 0 2011
STATE OF ALASKA
REGULATORY COMMISSION OF ALASKA

GCI COMMUNICATION CORP.

ACCESS SERVICES

20. Rates and Charges – Sitka (Cont'd)
20.3 Special Access Service (Cont'd)

20.3.4 High Capacity Service
Regulations concerning High Capacity Service are set forth in 7.6 preceding.

(T)

(A) Channel Termination per Termination*	Monthly Rate	NRC
- 1.544 Mbps	$216.49	$332.74
(Per mile over 3 miles)	$30.59	None
- 44.736 Mbps	$2,334.55	None
(Per mile over 3 miles)	$229.44	None

(B) Channel Mileage

(1) Channel Mileage Facility per Mile	
- 1.544 Mbps	$17.14
- 44.736 Mbps	$200.00
(2) Channel Mileage Termination per Termination	
- 1.544 Mbps	$79.46
- 44.736 Mbps	$500.00

*The Channel Termination Charge Specified in Section 7.2.1(A) of this tariff will not apply when: 1) the customer designated premises and the serving wire center are physically (including caged, cageless, shared and adjacent arrangements) or virtually collocated as those terms are used in 47 CFR 51.323, and (2) the customer obtains collocation for the purpose of interconnection with the Telephone Company's network for the transmission and routing of telephone exchange service, exchange access or both, and for the purpose of providing local exchange or exchange access service to its customers. (N) (N)

Tariff Advice No. 552-489 Effective: July 25, 2011

Issued by: GCI Communication Corp.
By: Cynthia L. Lynch Title: Tariffs and Licenses Manager

RECEIVED
OCT 03 2008
STATE OF ALASKA
REGULATORY COMMISSION OF ALASKA

GCI COMMUNICATION CORP.

ACCESS SERVICES

20. Rates and Charges – Sitka (Cont'd)
    20.3 Special Access Service (Cont'd)
        20.3.4 High Capacity Service (Cont'd)

(C) Optional Features and Functions	Monthly Rate	NRC	
(1) Multiplexing, per arrangement			(D)
- DS3 to DS1	$385.00		(D)
			(D)
- DS1 to Voice*	$109.28	$139.00	(I)
			(D)
			(D)
			(D)
			(D)
(2) Automatic Loop Transfer per arrangement**	$8.85		(D)
			(D)

* A channel of this DS1 to the Hub can be used for Digital Data service.
** An additional Channel Termination charge will apply whenever the spare line is provided as a leg to the customer designated premises.

Tariff Advice No. 504 Effective: November 17, 2008

Issued by: GCI Communication Corp.
By: Jennifer K.G. Robertson Title: Tariffs and Licenses Manager

RECEIVED
AUG 14 2007
STATE OF ALASKA
REGULATORY COMMISSION OF ALASKA

GCI COMMUNICATION CORP.

ACCESS SERVICES

20. Rates and Charges – Sitka (Cont'd)

20.4 Additional Engineering, Additional Labor and Miscellaneous Service
Regulations Concerning Additional Engineering, Additional labor and Miscellaneous Services are set forth in 9 preceding.

20.4.1 The Charges for Additional Engineering:

(A) Basic Time, normally scheduled working hours per engineer (each half hour or fraction thereof)	$59.87
(B) Overtime, outside of normally scheduled working hours per engineer (each half hour or fraction thereof)	$72.95
(C) Premium Time, outside of scheduled work day per engineer (each half hour or fraction thereof)	$86.03

20.4.2 The charges for Additional Labor:

(A) Installation and Repair

(1) Overtime, outside of normally scheduled working hours on a scheduled work day, per technician (each half hour or fraction thereof*)	$61.71
(2) Premium Time, outside of normally scheduled working day, per technician (each half hour or fraction thereof*)	$72.74

*A call-out of a Company employee at a time not consecutive with the employee's scheduled working period is subject to a minimum charge of four hours.

Tariff Advice No. 429 Effective: October 1, 2007

Issued by: GCI Communication Corp.

By: Jennifer K.G. Robertson Title: Tariffs and Licenses Manager

RECEIVED
AUG 14 2007
STATE OF ALASKA
REGULATORY COMMISSION OF ALASKA

GCI COMMUNICATION CORP.

ACCESS SERVICES

20. Rates and Charges – Sitka (Cont'd)
    20.4 Additional Engineering, Additional Labor and Miscellaneous Service (Cont'd)
        20.4.2 The charges for Additional Labor (Cont'd)

(B) Standby

(1) Basic Time, normally scheduled working hours, per technician (each half hour or fraction thereof*)	$50.69
(2) Overtime, outside of normally scheduled working hours on a scheduled work day, per technician (each half hour or fraction thereof*)	$61.71
(3) Premium time, outside of scheduled working day, per technician (each half hour or fraction thereof*)	$72.74

*A call-out of a Company employee at a time not consecutive with the employee's scheduled working period is subject to a minimum charge of four hours.

RECEIVED
DEC 21 2018
STATE OF ALASKA
REGULATORY COMMISSION OF ALASKA

GCI COMMUNICATION CORP.

ACCESS SERVICES

21. Rates and Charges – Copper Valley

21.1 Line Charges

a. Carrier Common Line (CCL) Rate

This charge is billed to AUSAC as described in section 3.7 preceding. (N) (D) | (D)

b. Network Access Fee (NAF) Rate

The total RCA NAF Rate is $5.75 per line per month.

RECEIVED
JUN 29 2022
STATE OF ALASKA
REGULATORY COMMISSION OF ALASKA

GCI COMMUNICATION CORP.

ACCESS SERVICES

21. Rates and Charges – Copper Valley (Cont'd)

21.2 Switched Access Service

21.2.1 Nonrecurring Charges

	Rate	Reference	
(A) Access Order	$86.00	5.2	
(B) Service Date Change Charge	$60.00	5.8	
(C) Design Change Charge	$84.00	5.8	
(D) Miscellaneous Service Order Charge	$123.00	5.8	
(E) Entrance Facility Installation – DS1	$352.68*		(R)
Entrance Facility Installation – DS3	$475.56*		|
Trunk Activation Per Order	$490.51		(R)
(F) Interim NXX Translation Per Order	$235.11	6.8	(R)
(G) Telecommunications Service Priority Charge Per Circuit	$54.63	9.3	

* Where facilities are available.

Pursuant to TA597-489 Effective: July 1, 2020

Issued by: GCI Communication Corp.

By: Karen Crapps Title: Director, Regulatory Affairs

RECEIVED
JUN 29 2022
STATE OF ALASKA
REGULATORY COMMISSION OF ALASKA

GCI COMMUNICATION CORP.

ACCESS SERVICES

21. Rates and Charges – Copper Valley (Cont'd)

21.2 Switched Access Service

21.2.2 Recurring Charges

	Rate	Reference	
(A) Common Transport Per Minutes of Use – Orig Toll	N/A	6.8	
Terminating Tandem Switching – per access minute	$0.000000		
Joint Tandem Switched Transport – Orig Toll Free	N/A		
(B) Entrance Facility, per termination – DS1	$402.22*		(I)
Entrance Facility, per termination – DS3	$3626.49*		
Direct Trunk Transport			
Direct Trunked Termination – DS1	$142.97*		(I)
Direct Trunked Termination – DS3	$906.61*		
Direct Trunked Facility, per mile – DS1	$27.57*		(I)
Direct Trunked Facility, per mile – DS3	$237.04*		
(C) Multiplexing, per arrangement – DS3 to DS1	$827.17*		
Multiplexing, per arrangement – DS1 to Voice	$319.37*		
(D) Local Switching (Per Minutes of Use) – Orig Toll	$0.004074	6.8	
Local Switching (Per Minutes of Use) – Originating Toll Free	$0.002037	6.8	(I)
(E) Information Surcharge Per 100 Minutes – Orig Toll	$0.066976	6.8	
Information Surcharge Per 100 Minutes – Originating Toll Free	$0.033488	6.8	(I)

* Where facilities are available.

RECEIVED
JUN 29 2022
STATE OF ALASKA
REGULATORY COMMISSION OF ALASKA

GCI COMMUNICATION CORP.

ACCESS SERVICES

21. Rates and Charges – Copper Valley (Cont'd)
    21.2 Switched Access Service (Cont'd)
        21.2.2 Recurring Charges (Cont'd)

	Rate	Reference	
(F) TSP Database Charge Per Circuit	N/A	9.3	
(G) Toll Free Database Access Service Queries	$0.002224	6.8	(R)
21.2.3 Equal Access Recovery Charge Monthly Rate per Presubscribed Equal Access Line	$0.00	6.8	
21.2.4 Presubscription Change Charge Submitted using manual methods	$5.50	9.3	
Submitted using manual methods when both the interLATA PIC and intraLATA PIC selections are changed simultaneously	$2.75	9.3	

21.2.5 Assumed Minutes of Use	Assumed Minutes Per Month	Tariff Section Reference
(A) Feature Group A, Two Way Calling (1510 Originating, 2685 Terminating)	4195	6.8
(B) Feature Group A, Originating Only	1510	6.8
(C) Feature Group A, Terminating Only	2685	6.8
(D) Feature Group B, Two Way Calling (3132 Originating, 5568 Terminating)	8700	6.8
(E) Feature Group B, Originating Only	3132	6.8
(F) Feature Group B, Terminating Only	5568	6.8

RECEIVED
JUN 04 2008
STATE OF ALASKA
REGULATORY COMMISSION OF ALASKA

GCI COMMUNICATION CORP.

ACCESS SERVICES

21. Rates and Charges – Copper Valley (Cont'd)

21.3 Special Access Service

Regulations concerning charges associated with Surcharge for Special Access Service are set forth in 7.3 preceding.

21.3.1a Surcharge Monthly Rate $25.00

21.3.1b Telecommunications Service Priority Charge
Regulations concerning charges associated with Surcharge for Miscellaneous Service are set forth in 9.3 preceding.

	Monthly	NRC
	$1.00	$55.00

21.3.1c Special Access Ordering
Regulations concerning charges associated with Access Ordering are set forth in 5.2 and 5.8 preceding

(A) Access Order Charge Per Order	$97.00	(R)
(B) Service Date Change Charge Service Date Change Charge will apply, on a per order per occurrence basis, for each service date changed. The Access Order Charge as specified in 143.1c(A) preceding does not apply.	$44.00	(I)
(C) Design Change Charge The Design Change Charge will apply on a per order per occurrence basis, for each order requiring design change.	$44.00	(I)
(D) Miscellaneous Service Order Charge	$44.00	(I)

Pursuant to:
U-07-150(5)

Effective: July 21, 2008

Issued by: GCI Communication Corp.

By: Jennifer K.G. Robertson Title: Tariffs and Licenses Manager

RECEIVED
MAR 0 5 2010
STATE OF ALASKA
REGULATORY COMMISSION OF ALASKA

GCI COMMUNICATION CORP.

ACCESS SERVICES

21. Rates and Charges – Copper Valley (Cont'd)
    21.3 Special Access Service (Cont'd)

21.3.2 Voice Grade Service
Regulations concerning Voice Grade are set forth in 7.4 preceding.

	Monthly Rate	NRC	
(A) Channel Termination Per Termination			
Two-Wire	$77.55	$325.00	(I)
Four-Wire	$123.70	$325.00	(I)
(B) Channel Mileage			
(1) Channel Mileage Facility per Mile			
Two-Wire	N/A		
Four-Wire	N/A		
(2) Channel Mileage Termination per Term			
Two-Wire	N/A		
Four-Wire	N/A		
(C) Optional Features and Functions			
(1) Bridging			
(A) Voice Bridging per Port			
Two-Wire	$7.85		
Four-Wire	$7.85		
(B) Data Bridging per Port			
Two-Wire	$7.85		
Four-Wire	$7.85		

Tariff Advice No. 535 Effective: March 20, 2010

Issued by: GCI Communication Corp.
By: Cynthia L. Lynch Title: Tariffs and Licenses Manager

RECEIVED
JUN 04 2008
STATE OF ALASKA
REGULATORY COMMISSION OF ALASKA

GCI COMMUNICATION CORP.

ACCESS SERVICES

21. Rates and Charges – Copper Valley (Cont'd)
    21.3 Special Access Service (Cont'd)
        21.3.2 Voice Grade Service (Cont'd)
        Regulations concerning Voice Grade are set forth in 7.4 preceding.

(C) Optional Features and Functions (cont'd)	Monthly Rate	NRC	
(1) Bridging (cont'd)			
(C) Dataphone Select-A-Station Sequential Arrangement, Ports per Channel Connected			
Two-Wire	$26.81		(I)
Four-Wire	$142.21		(I)
(D) Dataphone Select-A-Station Addressable Arrangement, Ports per Channel Connected			
Two-Wire	$28.69		(I)
Four-Wire	$124.21		(I)
(E) Telemetry and Alarm Bridging, per Channel Connected			
Split Band	$12.52		(I)
Summation	$4.88		(I)
Passive Bridging	$0.34		(I)

Pursuant to:
U-07-150(5)

Effective: July 21, 2008

Issued by: GCI Communication Corp.

By: Jennifer K.G. Robertson

Title: Tariffs and Licenses Manager

RECEIVED
MAR 05 2010
STATE OF ALASKA
REGULATORY COMMISSION OF ALASKA

GCI COMMUNICATION CORP.

ACCESS SERVICES

21. Rates and Charges – Copper Valley (Cont'd)
    21.3 Special Access Service (Cont'd)
        21.3.2 Voice Grade Service (Cont'd)
            (C) Optional Features and Functions (Cont'd)

	Monthly Rate	NRC	
(2) Conditioning per Termination			
- C-Type	$8.70	None	
- Improved Attenuation Distortion	None	None	
- Improved Envelope Delay Distortion	None	None	
- Data Capability	$9.80	None	(I)
- Telephoto Capability	$10.91	None	
- Sealing Current	None		
(3) Improved Return Loss per Termination			
- Effective Two-Wire	$15.46	None	
- Effective Four-Wire	$15.46	None	
(4) Customer Specified Receive Level per Two-Wire Termination	$10.63	None	
(5) Multiplexing, per Arrangement Voice to Telegraph Grade	$273.29		
(6) Signaling Capability per Termination	$15.65	None	
(7) Selective Signaling Arrangement, per Arrangement	$7.85	None	
(8) Transfer Arrangement			
4 Port	$3.78	None	
5 Port	$8.64	None	

Tariff Advice No. 535 Effective: March 20, 2010

Issued by: GCI Communication Corp.

By: Cynthia L. Lynch Title: Tariffs and Licenses Manager

RECEIVED
MAR 05 2010
STATE OF ALASKA
REGULATORY COMMISSION OF ALASKA

GCI COMMUNICATION CORP.

ACCESS SERVICES

21. Rates and Charges – Copper Valley (Cont'd)
21.3 Special Access Service (Cont'd)

21.3.3 Digital Data Service

Regulations concerning Digital Data Service are set forth in 7.5 preceding.

(A) Channel Termination per Termination	Monthly Rate	NRC	
- 2.4 kbps	$96.54	$353.00	
- 4.8 kbps	$96.54	$353.00	
- 9.6 kbps	$96.54	$353.00	
- 19.2 kbps	$96.54	$353.00	
- 56.0 kbps	$143.40	$353.00	(I)
- 64.0 kbps	$96.54	$353.00	

(B) Channel Mileage

(1) Channel Mileage Facility per Mile per Month		(2) Channel Mileage Facility Termination per Month	
2.4 kbps thru 64.0	None	2.4 kbps thru 64.0	None

(C) Optional Features and Functions		
(1) Bridging per port	$9.49	None
(2) Loop Transfer Arrangement	$7.51	

(D) Channel Service Unit, Per Termination	
- 2.4 kbps	$37.52
- 4.8 kbps	$37.52
- 9.6 kbps	$37.52
- 56.0 kbps	$37.52

Tariff Advice No. 535 Effective: March 20, 2010

Issued by: GCI Communication Corp.

By: Cynthia L Lynch Title: Tariffs and Licenses Manager

RECEIVED
MAR 05 2010
STATE OF ALASKA
REGULATORY COMMISSION OF ALASKA

GCI COMMUNICATION CORP.

ACCESS SERVICES

21. Rates and Charges – Copper Valley (Cont'd)
    21.3 Special Access Service (Cont'd)

21.3.4 High Capacity Service
Regulations concerning High Capacity Service are set forth in 7.6 preceding.

(A) Channel Termination per Termination	Monthly Rate	NRC	
- 1.544 Mbps	$347.75	$378.00	(I)
- 3.152 Mbps	ICB	ICB	
- 6.312 Mbps	ICB	ICB	
- 44.736 Mbps	ICB	ICB	
- 274.175 Mbps	ICB	ICB	

(B) Channel Mileage

(1) Channel Mileage Facility per Mile	
- 1.544 Mbps	None
- 3.152 Mbps	None
- 6.312 Mbps	None
- 44.736 Mbps	None
- 274.175 Mbps	None

(2) Channel Mileage Termination per Termination	
- 1.544 Mbps	None
- 3.152 Mbps	None
- 6.312 Mbps	None
- 44.736 Mbps	None
- 274.175 Mbps	None

RECEIVED
JUN 04 2008
STATE OF ALASKA
REGULATORY COMMISSION OF ALASKA

GCI COMMUNICATION CORP.

ACCESS SERVICES

21. Rates and Charges – Copper Valley (Cont'd)
    21.3 Special Access Service (Cont'd)
        21.3.4 High Capacity Service (Cont'd)

(C) Optional Features and Functions

	Monthly Rate	NRC	
(1) Multiplexing, per arrangement			
- DS4 to DS1	ICB		
- DS3 to DS1	$573.08		(I)
- DS2 to DS1	ICB		
- DS1C to DS1	ICB		
- DS1 to Voice*	$221.26		(I)
- DS1 to DS0	$221.26		(I)
- DS0 to twenty (20) 2.4 kbps	$471.22		(I)
- DS0 to ten (10) 4.8 kbps	$320.18		(I)
- DS0 to five (5) 9.6 kbps	$283.93		(I)
(2) Automatic Loop Transfer per arrangement**	$190.90		(I)
(3) Transfer Arrangement, 4 port	$208.07		(I)
(4) Synchronization	ICB		

* A channel of this DS1 to the Hub can be used for Digital Data service.
** An additional Channel Termination charge will apply whenever the spare line is provided as a leg to the customer designated premises.

(D) Network Channel Terminating Equipment (NCTE),

(1) Per Termination – 1.544 Mbps	$108.26	(I)
(2) Per Termination – Automatic Loop Transfer	$434.96	(I)

Pursuant to:
U-07-150(5)

Effective: July 21, 2008

Issued by: GCI Communication Corp.

By: Jennifer K.G. Robertson

Title: Tariffs and Licenses Manager

RECEIVED

APR 11 2014

STATE OF ALASKA
REGULATORY COMMISSION OF ALASKA

GCI COMMUNICATION CORP.

ACCESS SERVICES

21. Rates and Charges – Copper Valley (Cont'd)

21.4 Additional Engineering, Labor and Miscellaneous Service – Special Access (T)
Regulations Concerning Additional Engineering, Additional labor and Miscellaneous Services are set forth in 9 preceding.

21.4.1 The Charges for Additional Engineering:

(A) Basic Time, normally scheduled working hours per engineer (each half hour or fraction thereof) $27.19

(B) Overtime, outside of normally scheduled working hours per engineer (each half hour or fraction thereof) $40.79

(C) Premium Time, outside of scheduled work day per engineer (each half hour or fraction thereof) $54.38

21.4.2 The charges for Additional Labor:

(A) Installation and Repair

(1) Overtime, outside of normally scheduled working hours on a scheduled work day, per technician (each half hour or fraction thereof*) $32.90

(2) Premium Time, outside of normally scheduled working day, per technician (each half hour or fraction thereof*) $43.86

*A call-out of a Company employee at a time not consecutive with the employee's scheduled working period is subject to a minimum charge of four hours.

Pursuant to U-13-134(7) Effective: July 1, 2013

Issued by: GCI Communication Corp.

By: Trenee for Cindy Hall Title: Tariffs and Licenses Manager

RECEIVED
JUN 04 2008
STATE OF ALASKA
REGULATORY COMMISSION OF ALASKA

GCI COMMUNICATION CORP.

ACCESS SERVICES

21. Rates and Charges – Copper Valley (Cont'd)
    21.4 Additional Engineering, Additional Labor and Miscellaneous Service (Cont'd)
        21.4.2 The charges for Additional Labor (Cont'd)

(B) Standby

(1) Basic Time, normally scheduled working hours, per technician (each half hour or fraction thereof*)	$21.67	(I)
(2) Overtime, outside of normally scheduled working hours on a scheduled work day, per technician (each half hour or fraction thereof*)	$32.51	(I)
(3) Premium time, outside of scheduled working day, per technician (each half hour or fraction thereof*)	$43.34	(I)

*A call-out of a Company employee at a time not consecutive with the employee's scheduled working period is subject to a minimum charge of four hours.

Pursuant to:
U-07-150(5)

Effective: July 21, 2008

Issued by: GCI Communication Corp.

By: Jennifer K.G. Robertson

Title: Tariffs and Licenses Manager

RECEIVED
JUN 04 2008
STATE OF ALASKA
REGULATORY COMMISSION OF ALASKA

GCI COMMUNICATION CORP.

ACCESS SERVICES

21. Rates and Charges – Copper Valley (Cont'd)
    21.3 Special Access Service (Cont'd)
        21.4.2 The Charges for Additional Labor (Cont'd)

(C) Testing and Maintenance with other telephone companies, or other labor.

(1) Installation and Repair

Basic Time - normally scheduled working hours, per technician (each half hour or fraction thereof*)	$21.93	(I)
Overtime - outside of normally scheduled working hours on a scheduled work day, per technician (each half hour or fraction thereof*)	$32.90	(I)
Premium Time - outside of scheduled work day per technician (each half hour of fraction thereof*)	$43.86	(I)

(2) Central Office Maintenance

Basic Time - normally scheduled working hours, per technician (each half hour or fraction thereof*)	$23.81	(I)
Overtime - outside of normally scheduled working hours on a scheduled work day, per technician (each half hour or fraction thereof*)	$35.72	(I)
Premium Time - outside of scheduled work day per technician (each half hour of fraction thereof*)	$47.62	(I)

*A call-out of a Company employee at a time not consecutive with the employee's scheduled working period is subject to a minimum charge of four hours.

Pursuant to:
U-07-150(5)

Effective: July 21, 2008

Issued by: GCI Communication Corp.

By: Jennifer K.G. Robertson

Title: Tariffs and Licenses Manager

RCA No. 489 Original Sheet No. 323.1

Canceling

Sheet No.

RECEIVED
APR 11 2014
STATE OF ALASKA
REGULATORY COMMISSION OF ALASKA

GCI COMMUNICATION CORP.

ACCESS SERVICES

21. Rates and Charges – Copper Valley (Cont'd)

21.5 Additional Engineering, Labor and Miscellaneous Service – Switched Access (N)
Regulations Concerning Additional Engineering, Additional labor and Miscellaneous Services are set forth in 9 preceding. Each Half Hour, or Fraction Thereof.

21.5.1 The Charges for Engineering:	
(A) Basic Time, per engineer	$31.03
(B) Overtime, per engineer	$46.55
(C) Premium Time, per engineer	$62.06
21.5.2 Additional Labor Periods:*	
(A) Installation and Repair	
(1) Overtime, per technician	$47.57*
(2) Overtime, per technician	$63.42*
(B) Standby	
(1) Basic Time, per technician	$21.18*
(2) Overtime, per technician	$31.77*
(3) Premium Time, per technician	$42.36*
(C) Testing and Maintenance, Installation and Repair	
(1) Basic Time, per technician	$31.71
(2) Overtime, per technician	$47.57*
(3) Premium Time, per technician	$63.42*
(D) Central Office Maintenance, Technician	
(1) Basic Time, per technician	$34.66
(2) Overtime, per technician	$51.99*
(3) Premium Time, per technician	$69.32*

(N)

*A call-out of a Company employee at a time not consecutive with the employee's scheduled working period is subject to a minimum charge of four hours.

Pursuant to U-13-134(7) Effective: July 1, 2013

Issued by: GCI Communication Corp.

By: Philip J Brenner for Cindy Hill Title: Tariffs and Licenses Manager

RECEIVED
DEC 21 2018
STATE OF ALASKA
REGULATORY COMMISSION OF ALASKA

GCI COMMUNICATION CORP.

ACCESS SERVICES

22. Rates and Charges – Nome

GCI is currently providing service in the Nome Exchanges only. (As defined on Sheet No. 39.) All other exchanges in this service area are not being serviced at this time.

22.1 Line Charges

a. Carrier Common Line (CCL) Rate

This charge is billed to AUSAC as described in section 3.7 preceding. (N) (D) (D) (D)

b. Network Access Fee (NAF) Rate

The total RCA NAF Rate is $5.75 per line per month.

RECEIVED
JUN 29 2022
STATE OF ALASKA
REGULATORY COMMISSION OF ALASKA

GCI COMMUNICATION CORP.

ACCESS SERVICES

22. Rates and Charges – Nome (Cont'd)

22.2 Switched Access Service

22.2.1 Nonrecurring Charges

	Rate	Reference	
(A) Access Order	$86.00	5.2	
(B) Service Date Change Charge	$60.00	5.8	
(C) Design Change Charge	$84.00	5.8	
(D) Miscellaneous Service Order Charge	$123.00	5.8	
(E) Entrance Facility Installation – DS1	$357.16		(I)
Entrance Facility Installation – DS3	$481.61*		
Trunk Activation per Order	$496.75		(I)
(F) Interim NXX Translation Per Order	$238.10	6.8	(I)
(G) Telecommunications Service Priority Charge Per Circuit	$54.63	9.3	

* Where facilities are available.

Pursuant to: TA597-489 Effective: July 01, 2022

Issued by: GCI Communication Corp.

By: Karen Crapps Title: Director, Regulatory Affairs

RECEIVED
JUN 29 2022
STATE OF ALASKA
REGULATORY COMMISSION OF ALASKA

GCI COMMUNICATION CORP.

ACCESS SERVICES

22. Rates and Charges – Nome (Cont'd)
    22.2 Switched Access Service
        22.2.2 Recurring Charges

	Rate	Reference	
(A) Common Transport Per Minutes of Use- Orig Toll	N/A	6.8	
Terminating Tandem Switched Termination -per access minute	$0.000000		
Terminating Tandem Switched Transport Facility -per access minute per mile	$0.000000		
Terminating Tandem Switching – per access minute	$0.000000		
Joint Tandem Switched Transport – Orig Toll Free	N/A		
(B) Entrance Facility, per termination –DS1	$148.39		(I)
Entrance Facility, per termination –DS3	$1,354.95*		(I)
Direct Trunked Transport:			
Direct Trunk Termination – DS1	$52.75		(I)
Direct Trunk Termination – DS3	$338.75*		(I)
Direct Trunk Facility – DS1	$10.15		(I)
Direct Trunk Facility – DS3	$88.55*		(I)
(C) Multiplexing, per arrangement – DS3 to DS1	$309.06*		(I)
Multiplexing, per arrangement – DS1 to Voice	$119.33		(I)
(D) Local Switching (Per Minutes of Use) – Originating Toll	$0.0141	6.8	
Local Switching (Per Minutes of Use) – Originating Toll Free	$0.00705	6.8	(R)
(E) Information Surcharge Per 100 Minutes- Originating Toll	$0.00	6.8	
Information Surcharge Per 100 Minutes- Originating Toll Free	$0.00	6.8	

* Where facilities are available.

RECEIVED
JUN 29 2022
STATE OF ALASKA
REGULATORY COMMISSION OF ALASKA

GCI COMMUNICATION CORP.

ACCESS SERVICES

22. Rates and Charges – Nome (Cont'd)
22.2 Switched Access Service (Cont'd)
22.2.2 Recurring Charges (Cont'd)

		Rate	Reference	
(E)	TSP Database Charge Per Circuit	$1.00	9.3	
(F)	Toll Free Database Access Service Queries	$0.002224	6.8	(R)
22.2.3	Equal Access Recovery Charge Monthly Rate per Presubscribed Equal Access Line	$0.00	6.8	
22.2.4	Presubscription Change Charge Submitted using manual methods	$5.50	9.3	
	Submitted using manual methods when both the interLATA PIC and intraLATA PIC selections are changed simultaneously	$2.75	9.3	

22.2.5	Assumed Minutes of Use	Assumed Minutes Per Month	Tariff Section Reference
(A)	Feature Group A, Two Way Calling (1510 Originating, 2685 Terminating)	4195	6.8
(B)	Feature Group A, Originating Only	1510	6.8
(C)	Feature Group A, Terminating Only	2685	6.8
(D)	Feature Group B, Two Way Calling (3132 Originating, 5568 Terminating)	8700	6.8
(E)	Feature Group B, Originating Only	3132	6.8
(F)	Feature Group B, Terminating Only	5568	6.8

RECEIVED
DEC 0 4 2008
STATE OF ALASKA
REGULATORY COMMISSION OF ALASKA

GCI COMMUNICATION CORP.

ACCESS SERVICES

22. Rates and Charges – Nome (Cont'd)

22.3 Special Access Service

Regulations concerning charges associated with Surcharge for Special Access Service are set forth in 7.3 preceding.

22.3.1a Surcharge Monthly Rate $25.00

22.3.1b Telecommunications Service Priority Charge
Regulations concerning charges associated with Surcharge for Miscellaneous Service are set forth in 9.3 preceding.

	Monthly	NRC
	$1.00	$55.00

22.3.1c Special Access Ordering
Regulations concerning charges associated with Access Ordering are set forth in 5.2 and 5.8 preceding

(A) Access Order Charge Per Order	$97.00	(I)
(B) Service Date Change Charge Service Date Change Charge will apply, on a per order per occurrence basis, for each service date changed. The Access Order Charge as specified in 143.1c(A) preceding does not apply.	$44.00	
(C) Design Change Charge The Design Change Charge will apply on a per order per occurrence basis, for each order requiring design change.	$44.00	
(D) Miscellaneous Service Order Charge	$44.00	

Pursuant to:
U-08-152(1)

Effective: December 20, 2008

Issued by: GCI Communication Corp.

By: Jennifer K.G. Robertson

Title: Tariffs and Licenses Manager

RECEIVED
SEP 2 4 2009
STATE OF ALASKA
REGULATORY COMMISSION OF ALASKA

GCI COMMUNICATION CORP.

ACCESS SERVICES

22. Rates and Charges – Nome (Cont'd)
22.3 Special Access Service (Cont'd)

22.3.2 Voice Grade Service
Regulations concerning Voice Grade are set forth in 7.4 preceding.

	Monthly Rate	NRC	
(A) Channel Termination Per Termination			
Two-Wire	$71.54	$325.00	(R)
Four-Wire	$114.46	$325.00	(R)
(B) Channel Mileage			
(1) Channel Mileage Facility per Mile			
Two-Wire	N/A		
Four-Wire	N/A		
(2) Channel Mileage Termination per Term			
Two-Wire	N/A		
Four-Wire	N/A		
(C) Optional Features and Functions			
(1) Bridging			
(A) Voice Bridging per Port			
Two-Wire	ICB	ICB	
Four-Wire	ICB	ICB	
(B) Data Bridging per Port			
Two-Wire	ICB	ICB	
Four-Wire	ICB	ICB	

Tariff Advice No. 529 Effective: November 9, 2009

Issued by: GCI Communication Corp.
By: Jennifer K G Robertson Title: Tariffs and Licenses Manager

RECEIVED
JAN 24 2008
STATE OF ALASKA
REGULATORY COMMISSION OF ALASKA

GCI COMMUNICATION CORP.

ACCESS SERVICES

22. Rates and Charges – Nome (Cont'd)
    22.3 Special Access Service (Cont'd)
        22.3.2 Voice Grade Service (Cont'd)
        Regulations concerning Voice Grade are set forth in 7.4 preceding.

(C) Optional Features and Functions (cont'd)	Monthly Rate	NRC
(1) Bridging (cont'd)		
(C) Telephoto Bridging, Per Port		
Two-Wire	ICB	ICB
Four-Wire	ICB	ICB
(D) Dataphone Select-A-Station Addressable Arrangement, Ports per Channel Connected		
Two-Wire	ICB	ICB
Four-Wire	ICB	ICB
(E) Telemetry and Alarm Bridging, per Channel Connected		
Split Band	ICB	ICB
Summation	ICB	ICB
Passive Bridging	ICB	ICB

Pursuant to:
U-08-032(1)

Effective: March 10, 2008

Issued by: GCI Communication Corp.

By: _____ Title: Tariffs and Licenses Manager

RECEIVED
SEP 2 4 2009
STATE OF ALASKA
REGULATORY COMMISSION OF ALASKA

GCI COMMUNICATION CORP.

ACCESS SERVICES

22. Rates and Charges – Nome (Cont'd)
22.3 Special Access Service (Cont'd)
22.3.2 Voice Grade Service (Cont'd)
(C) Optional Features and Functions (Cont'd)

	Monthly Rate	NRC	
(2) Conditioning per Termination			
- C-Type	$11.81	ICB	(R)
- Improved Attenuation Distortion	ICB	ICB	
- Improved Envelope Delay Distortion	ICB	ICB	
- Data Capability	$8.10	ICB	(I)
- Telephoto Capability	ICB	ICB	
- Sealing Current	ICB	ICB	
(3) Improved Return Loss per Termination			
- Effective Two-Wire	$20.96	ICB	(R)
- Effective Four-Wire	$20.96	ICB	(R)
(4) Customer Specified Receive Level per Two-Wire Termination	$14.41	ICB	(R)
(5) Multiplexing, per Arrangement Voice to Telegraph Grade	ICB	ICB	
(6) Signaling Capability per Termination	$21.24	ICB	(R)
(7) Selective Signaling Arrangement, per Arrangement	$10.65	ICB	(R)
(8) Transfer Arrangement			
4 Port	ICB	ICB	
5 Port	ICB	ICB	

Tariff Advice No. 529 Effective: November 9, 2009

Issued by: GCI Communication Corp.
By: Jennifer K.G. Robertson Title: Tariffs and Licenses Manager

RECEIVED
SEP 24 2009
STATE OF ALASKA
REGULATORY COMMISSION OF ALASKA

GCI COMMUNICATION CORP.

ACCESS SERVICES

22. Rates and Charges – Nome (Cont'd)
22.3 Special Access Service (Cont'd)

22.3.3 Digital Data Service

Regulations concerning Digital Data Service are set forth in 7.5 preceding.

(A) Channel Termination per Termination	Monthly Rate	NRC	
- 2.4 kbps	$132.03	$353.00	(R)
- 4.8 kbps	$132.03	$353.00	
- 9.6 kbps	$132.03	$353.00	
- 19.2 kbps	$132.03	$353.00	
- 56.0 kbps	$132.03	$353.00	
- 64.0 kbps	$132.03	$353.00	(R)

(B) Channel Mileage

(1) Channel Mileage Facility per Mile per Month		(2) Channel Mileage Facility Termination per Month	
2.4 kbps thru 64.0	ICB	2.4 kbps thru 64.0	ICB

(C) Optional Features and Functions		
(1) Bridging per port	ICB	ICB
(2) Loop Transfer Arrangement	ICB	ICB

(D) Channel Service Unit, Per Termination			
- 2.4 kbps	$50.91	ICB	(R)
- 4.8 kbps	$50.91	ICB	
- 9.6 kbps	$50.91	ICB	
- 56.0 kbps	$50.91	ICB	(R)

RECEIVED
SEP 2 4 2009
STATE OF ALASKA
REGULATORY COMMISSION OF ALASKA

GCI COMMUNICATION CORP.

ACCESS SERVICES

22. Rates and Charges – Nome (Cont'd)
22.3 Special Access Service (Cont'd)

22.3.4 High Capacity Service
Regulations concerning High Capacity Service are set forth in 7.6 preceding.

(A) Channel Termination per Termination	Monthly Rate	NRC	
- 1.544 Mbps	$374.38	$378.00	(R)
- 3.152 Mbps	ICB	ICB	
- 6.312 Mbps	ICB	ICB	
- 44.736 Mbps	ICB	ICB	
- 274.175 Mbps	ICB	ICB	

(B) Channel Mileage

(1) Channel Mileage Facility per Mile	
- 1.544 Mbps	None
- 3.152 Mbps	None
- 6.312 Mbps	None
- 44.736 Mbps	None
- 274.175 Mbps	None

(2) Channel Mileage Termination per Termination	
- 1.544 Mbps	None
- 3.152 Mbps	None
- 6.312 Mbps	None
- 44.736 Mbps	None
- 274.175 Mbps	None

Tariff Advice No. 529 Effective: November 9, 2009

Issued by: GCI Communication Corp.

By: Jennifer K G Robertson Title: Tariffs and Licenses Manager

RECEIVED
SEP 2 4 2009
STATE OF ALASKA
REGULATORY COMMISSION OF ALASKA

GCI COMMUNICATION CORP.

ACCESS SERVICES

22. Rates and Charges – Nome (Cont'd)
22.3 Special Access Service (Cont'd)
22.3.4 High Capacity Service (Cont'd)

(C) Optional Features and Functions	Monthly Rate	NRC	
(1) Multiplexing, per arrangement			
- DS4 to DS1	None		
- DS3 to DS1	None		
- DS2 to DS1	None		
- DS1C to DS1	None		
- DS1 to Voice*	$300.13	ICB	(R)
- DS1 to DS0	$300.13	ICB	
- DS0 to twenty (20) 2.4 kbps	$639.19	ICB	
- DS0 to ten (10) 4.8 kbps	$434.31	ICB	
- DS0 to five (5) 9.6 kbps	$385.14	ICB	(R)
(2) Automatic Loop Transfer per arrangement**	$258.95	ICB	(R)
(3) Transfer Arrangement, 4 port	None		
(4) Synchronization	None		

* A channel of this DS1 to the Hub can be used for Digital Data service.
** An additional Channel Termination charge will apply whenever the spare line is provided as a leg to the customer designated premises.

(D) Network Channel Terminating Equipment (NCTE),			
(1) Per Termination – 1.544 Mbps	$146.86	ICB	(R)
(2) Per Termination – Automatic Loop Transfer	$590.02	ICB	(R)

Tariff Advice No. 529 Effective: November 9, 2009

Issued by: GCI Communication Corp.

By: Jennifer K.G. Robertson Title: Tariffs and Licenses Manager

RECEIVED

APR 11 2014

STATE OF ALASKA
REGULATORY COMMISSION OF ALASKA

GCI COMMUNICATION CORP.

ACCESS SERVICES

22. Rates and Charges – Nome (Cont'd)

22.4 Additional Engineering, Labor and Miscellaneous Service – Special Access (T)
Regulations Concerning Additional Engineering, Additional labor and Miscellaneous Services are set forth in 9 preceding.

22.4.1 The Charges for Additional Engineering:

(A) Basic Time, normally scheduled working hours per engineer (each half hour or fraction thereof*) $49.17

(B) Overtime, outside of normally scheduled working hours per engineer (each half hour or fraction thereof*) $73.77

(C) Premium Time, outside of scheduled work day per engineer (each half hour or fraction thereof*) $98.34

22.4.2 The charges for Additional Labor:

(A) Installation and Repair

(1) Overtime, outside of normally scheduled working hours on a scheduled work day, per technician (each half hour or fraction thereof*) $59.50

(2) Premium Time, outside of normally scheduled working day, per technician (each half hour or fraction thereof*) $79.32

*A call-out of a Company employee at a time not consecutive with the employee's scheduled working period is subject to a minimum charge of four hours.

Pursuant to U-13-134(7) Effective: July 1, 2013

Issued by: GCI Communication Corp.

By: Gladys Theuer for Cindy Hall Title: Tariffs and Licenses Manager

RECEIVED
SEP 2 4 2009
STATE OF ALASKA
REGULATORY COMMISSION OF ALASKA

GCI COMMUNICATION CORP.

ACCESS SERVICES

22. Rates and Charges – Nome (Cont'd)
    22.4 Additional Engineering, Additional Labor and Miscellaneous Service (Cont'd)
        22.4.2 The charges for Additional Labor (Cont'd)

(B) Standby

(1) Basic Time, normally scheduled working hours, per technician (each half hour or fraction thereof*)	$39.19	(R)
(2) Overtime, outside of normally scheduled working hours on a scheduled work day, per technician (each half hour or fraction thereof*)	$59.50	
(3) Premium time, outside of scheduled working day, per technician (each half hour or fraction thereof*)	$79.32	(R)

*A call-out of a Company employee at a time not consecutive with the employee's scheduled working period is subject to a minimum charge of four hours.

Tariff Advice No. 529 Effective: November 9, 2009

Issued by: GCI Communication Corp.
By: Jennifer K.G. Robertson Title: Tariffs and Licenses Manager

RECEIVED
SEP 2 4 2009
STATE OF ALASKA
REGULATORY COMMISSION OF ALASKA

GCI COMMUNICATION CORP.

ACCESS SERVICES

22. Rates and Charges – Nome (Cont'd)
22.3 Special Access Service (Cont'd)
22.4.2 The Charges for Additional Labor (Cont'd)

(C) Testing and Maintenance with other telephone companies, or other labor.

(1) Installation and Repair

Basic Time - normally scheduled working hours, per technician (each half hour or fraction thereof*)	$39.19	(R)
Overtime - outside of normally scheduled working hours on a scheduled work day, per technician (each half hour or fraction thereof*)	$59.50	
Premium Time - outside of scheduled work day per technician (each half hour of fraction thereof*)	$79.32	(R)

(2) Central Office Maintenance

Basic Time - normally scheduled working hours, per technician (each half hour or fraction thereof*)	$39.19	(R)
Overtime - outside of normally scheduled working hours on a scheduled work day, per technician (each half hour or fraction thereof*)	$59.50	
Premium Time - outside of scheduled work day per technician (each half hour of fraction thereof*)	$79.32	(R)

*A call-out of a Company employee at a time not consecutive with the employee's scheduled working period is subject to a minimum charge of four hours.

Tariff Advice No. 529 Effective: November 9, 2009

Issued by: GCI Communication Corp.
By: Jennifer K.G. Robertson Title: Tariffs and Licenses Manager

RECEIVED

APR 11 2014

STATE OF ALASKA
REGULATORY COMMISSION OF ALASKA

GCI COMMUNICATION CORP.

ACCESS SERVICES

22. Rates and Charges – Nome (Cont'd)

22.5 Additional Engineering, Labor and Miscellaneous Service – Switched Access (N)
Regulations Concerning Additional Engineering, Additional labor and Miscellaneous Services are set forth in 9 preceding. Each Half Hour, or Fraction Thereof.

21.5.1 The Charges for Engineering:	
(A) Basic Time, per engineer	$31.03
(B) Overtime, per engineer	$46.55
(C) Premium Time, per engineer	$62.06
21.5.2 Additional Labor Periods:*	
(A) Installation and Repair	
(1) Overtime, per technician	$47.57*
(2) Overtime, per technician	$63.42*
(B) Standby	
(1) Basic Time, per technician	$21.18*
(2) Overtime, per technician	$31.77*
(3) Premium Time, per technician	$42.36*
(C) Testing and Maintenance, Installation and Repair	
(1) Basic Time, per technician	$31.71
(2) Overtime, per technician	$47.57*
(3) Premium Time, per technician	$63.42*
(D) Central Office Maintenance, Technician	
(1) Basic Time, per technician	$34.66
(2) Overtime, per technician	$51.99*
(3) Premium Time, per technician	$69.32*

(N)

*A call-out of a Company employee at a time not consecutive with the employee's scheduled working period is subject to a minimum charge of four hours.

Pursuant to U-13-134(7) Effective: July 1, 2013

Issued by: GCI Communication Corp.

By: Cindy Thomas for Cindy Hall Title: Tariffs and Licenses Manager

RECEIVED
DEC 21 2018
STATE OF ALASKA
REGULATORY COMMISSION OF ALASKA

GCI COMMUNICATION CORP.

ACCESS SERVICES

23. Rates and Charges – Arctic Slope Area

23.1 Line Charges

a. Carrier Common Line (CCL) Rate

This charge is billed to AUSAC as described in section 3.7 preceding. (N) (D)

b. Network Access Fee (NAF) Rate

The total RCA NAF Rate is $5.75 per line per month.

RECEIVED
JUN 29 2022
STATE OF ALASKA
REGULATORY COMMISSION OF ALASKA

GCI COMMUNICATION CORP.

ACCESS SERVICES

23. Rates and Charges – Arctic Slope Area (Cont'd)

23.2 Switched Access Service

23.2.1 Nonrecurring Charges

	Rate	Reference	
(A) Access Order	$86.00	5.2	
(B) Service Date Change Charge	$60.00	5.8	
(C) Design Change Charge	$84.00	5.8	
(D) Miscellaneous Service Order Charge	$123.00	5.8	
(E) Entrance Facility Installation – DS1	$357.16 *		(I)
Entrance Facility Installation – DS3	$481.61 *		(I)
Trunk Activation Per Order	$496.75		(I)
(F) Interim NXX Translation Per Order	$238.10	6.8	(I)
(G) Telecommunications Service Priority Charge Per Circuit	$54.63	9.3	

* Where facilities are available.

Pursuant to: TA597-489 Effective: July 1, 2022

Issued by: GCI Communication Corp.

By: Karen Crapps Title: Director, Regulatory Affairs

RECEIVED
JUN 29 2022
STATE OF ALASKA
REGULATORY COMMISSION OF ALASKA

GCI COMMUNICATION CORP.

ACCESS SERVICES

23. Rates and Charges – Arctic Slope Area (Cont'd)
23.2 Switched Access Service (Cont'd)

23.2.2 Recurring Charges

	Rate	Reference	
(A) Common Transport Per Minutes of Use – Orig Toll	N/A	6.8	
Terminating Tandem Switching	$0.000000	6.8	
Joint Tandem Switched Transport – Orig Toll Free	N/A		
(B) Entrance Facility, per termination – DS1*	$231.90**		(I)
Entrance Facility, per termination – DS3*	$2,117.37**		(I)
Direct Trunked Transport:			
Direct Trunked Termination – DS1	$82.43**		(I)
Direct Trunked Termination – DS3	$529.32**		(I)
Direct Trunked Facility – DS1	$15.89**		(I)
Direct Trunked Facility – DS3	$138.41**		(I)
(C) Multiplexing, per arrangement – DS3 to DS1	$482.96**		(I)
Multiplexing, per arrangement – DS1 to Voice	$184.12**		
(D) Local Switching (Per Minutes of Use) – Orig Toll	$0.00	6.8	
Local Switching (Per Minutes of Use) – Originating Toll Free	$0.00	6.8	
(E) Information Surcharge Per 100 Minutes – Orig Toll	$0.00	6.8	
Information Surcharge Per 100 Minutes – Originating Toll Free	$0.00	6.8	

* The Entrance Facility charges specified in section 6.2 of this tariff will not apply when:
1) the customer designated premises and serving wire center are physically (including caged, cageless, shared and adjacent arrangements) or virtually collocated as those terms are used in 47 CFR 51.232 and
2) the customer obtains collocation for the purpose of interconnection with the Telephone Company's network for the transmission and routing of telephone exchange service, exchange access or both, and for the purpose of providing local exchange or exchange access services to its customers.

** Where facilities are available.

RECEIVED
JUN 29 2022
STATE OF ALASKA
REGULATORY COMMISSION OF ALASKA

GCI COMMUNICATION CORP.

ACCESS SERVICES

23. Rates and Charges – Arctic Slope Area (Cont'd)
23.2 Switched Access Service (Cont'd)
23.2.2 Recurring Charges (Cont'd)

		Rate	Reference	
(F)	TSP Database Charge Per Circuit	N/A	9.3	
(G)	Toll Free Database Access Service Queries	$0.002224	6.8	(R)
23.2.3	Equal Access Recovery Charge Monthly Rate per Presubscribed Equal Access Line	$0.00	6.8	
23.2.4	Presubscription Change Charge Submitted using manual methods	$5.50	9.3	
	Submitted using manual methods when both the interLATA PIC and intraLATA PIC selections are changed simultaneously	$2.75	9.3	

		Assumed Minutes Per Month	Tariff Section Reference
23.2.5	Assumed Minutes of Use		
(A)	Feature Group A, Two Way Calling (1510 Originating, 2685 Terminating)	4195	6.8
(B)	Feature Group A, Originating Only	1510	6.8
(C)	Feature Group A, Terminating Only	2685	6.8
(D)	Feature Group B, Two Way Calling (3132 Originating, 5568 Terminating)	8700	6.8
(E)	Feature Group B, Originating Only	3132	6.8
(F)	Feature Group B, Terminating Only	5568	6.8

RECEIVED
OCT 0 1 2008
STATE OF ALASKA
REGULATORY COMMISSION OF ALASKA

GCI COMMUNICATION CORP.

ACCESS SERVICES

23. Rates and Charges – Arctic Slope Area (Cont'd)

23.3 Special Access Service

Regulations concerning charges associated with Surcharge for Special Access Service are set forth in 7.3 preceding.

23.3.1a Surcharge Monthly Rate $25.00

23.3.1b Telecommunications Service Priority Charge
Regulations concerning charges associated with Surcharge for Miscellaneous Service are set forth in 9.3 preceding.

Monthly	NRC
$1.00	$55.00

23.3.1c Special Access Ordering
Regulations concerning charges associated with Access Ordering are set forth in 5.2 and 5.8 preceding

(A) Access Order Charge Per Order $93.00

(B) Service Date Change Charge $44.00
Service Date Change Charge will apply, on a per order per occurrence basis, for each service date changed. The Access Order Charge as specified in 143.1c(A) preceding does not apply.

(C) Design Change Charge $44.00
The Design Change Charge will apply on a per order per occurrence basis, for each order requiring design change.

(D) Miscellaneous Service Order Charge $44.00

Pursuant to:
U-08-135(1)

Effective: November 21, 2008

Issued by: GCI Communication Corp.

By: Jennifer K.G. Robertson

Title: Tariffs and Licenses Manager

RECEIVED
OCT 0 2 2009
STATE OF ALASKA
REGULATORY COMMISSION OF ALASKA

GCI COMMUNICATION CORP.

ACCESS SERVICES

23. Rates and Charges – Arctic Slope Area (Cont'd)
23.3 Special Access Service (Cont'd)

23.3.2 Voice Grade Service
Regulations concerning Voice Grade are set forth in 7.4 preceding.

	Monthly Rate	NRC	
(A) Channel Termination Per Termination*			
Two-Wire	$208.90	$289.00	(R)
Four-Wire	$334.25	$289.00	(R)
(B) Channel Mileage			
(1) Channel Mileage Facility per Mile			
Two-Wire	N/A		
Four-Wire	N/A		
(2) Channel Mileage Termination per Term			
Two-Wire	N/A		
Four-Wire	N/A		

* The Channel Termination charge specified in section 7.2.1(A) of this tariff will not apply when: (N)
1) the customer designated premises and serving wire center are physically (including caged, cageless, shared and adjacent arrangements) or virtually collocated as those terms are used in 47 CFR 51.232 and
2) the customer obtains collocation for the purpose of interconnection with the Telephone Company's network for the transmission and routing of telephone exchange service, exchange access or both, and for the purpose of providing local exchange or exchange access services to its customers. (N)

(L)

(L) Matter relocated to Original page 341.1 (L)

Tariff Advice No. 531 Effective: November 16, 2009

Issued by: GCI Communication Corp.
By: Jennifer K.G. Robertson Title: Tariffs and Licenses Manager

RCA No. 489 Original Sheet No. 341.1

Canceling

Sheet No.

RECEIVED
OCT 0 2 2009
STATE OF ALASKA
REGULATORY COMMISSION OF ALASKA

GCI COMMUNICATION CORP.

ACCESS SERVICES

23. Rates and Charges – Arctic Slope Area (Cont'd)
23.3 Special Access Service (Cont'd)
23.3.2 Voice Grade Service (Cont'd)

(C) Optional Features and Functions	Monthly Rate	NRC	(L)
(1) Bridging			
(A) Voice Bridging per Port			
Two-Wire	$5.79	N/A	
Four-Wire	$5.79	N/A	
(B) Data Bridging per Port			
Two-Wire	$5.79	N/A	
Four-Wire	$5.79	N/A	(L)

(L) Matter relocated from 1st revised page 341

Tariff Advice No. 531 Effective: November 16, 2009

Issued by: GCI Communication Corp.
By: Jennifer K.G. Robertson Title: Tariffs and Licenses Manager

RECEIVED
OCT 01 2008
STATE OF ALASKA
REGULATORY COMMISSION OF ALASKA

GCI COMMUNICATION CORP.

ACCESS SERVICES

23. Rates and Charges – Arctic Slope Area (Cont'd)
23.3 Special Access Service (Cont'd)
23.3.2 Voice Grade Service (Cont'd)
Regulations concerning Voice Grade are set forth in 7.4 preceding.

(C) Optional Features and Functions (cont'd)	Monthly Rate	NRC
(1) Bridging (cont'd)		
(C) Telephoto Bridging, Per Port		
Two-Wire	$5.79	N/A
Four-Wire	$5.79	N/A
(D) Dataphone Select-A-Station:		
1. Sequential Arrangement, Ports per Channel Connected		
Two-Wire	$19.77	N/A
Four-Wire	$104.88	N/A
2. Addressable Arrangement, Ports per Channel Connected		
Two-Wire	$21.16	N/A
Four-Wire	$91.60	N/A
(E) Telemetry and Alarm Bridging, per Channel Connected		
Split Band	$9.23	N/A
Summation	$3.60	N/A
Passive Bridging	$0.25	N/A

Pursuant to:
U-08-135(1)

Effective: November 21, 2008

Issued by: GCI Communication Corp.

By: Jennifer K.G. Robertson Title: Tariffs and Licenses Manager

RECEIVED
OCT 0 1 2008
STATE OF ALASKA
REGULATORY COMMISSION OF ALASKA

GCI COMMUNICATION CORP.

ACCESS SERVICES

23. Rates and Charges – Arctic Slope Area (Cont'd)
23.3 Special Access Service (Cont'd)
23.3.2 Voice Grade Service (Cont'd)
(C) Optional Features and Functions (Cont'd)

	Monthly Rate	NRC
(2) Conditioning per Termination		
- C-Type	$6.42	N/A
- Improved Attenuation Distortion	ICB	ICB
- Improved Envelope Delay Distortion	ICB	ICB
- Data Capability	$4.41	N/A
- Telephoto Capability	$8.04	N/A
- Sealing Current	ICB	ICB
(3) Improved Return Loss per Termination		
- Effective Two-Wire	$11.40	N/A
- Effective Four-Wire	$11.40	N/A
(4) Customer Specified Receive Level per Two-Wire Termination	$7.84	N/A
(5) Multiplexing, per Arrangement Voice to Telegraph Grade	$201.54	N/A
(6) Signaling Capability per Termination	$11.54	N/A
(7) Selective Signaling Arrangement, per Arrangement	$5.79	N/A
(8) Transfer Arrangement		
4 Port	$2.79	N/A
5 Port	$6.37	N/A

Pursuant to:
U-08-135(1)

Effective: November 21, 2008

Issued by: GCI Communication Corp.
By: Jennifer K.G. Robertson Title: Tariffs and Licenses Manager

RECEIVED
OCT 01 2008
STATE OF ALASKA
REGULATORY COMMISSION OF ALASKA

GCI COMMUNICATION CORP.

ACCESS SERVICES

23. Rates and Charges – Arctic Slope Area (Cont'd)
23.3 Special Access Service (Cont'd)

23.3.3 Digital Data Service

Regulations concerning Digital Data Service are set forth in 7.5 preceding.

(A) Channel Termination per Termination	Monthly Rate	NRC
- 2.4 kbps	$71.29	$344.00
- 4.8 kbps	$71.29	$344.00
- 9.6 kbps	$71.29	$344.00
- 19.2 kbps	$71.29	$344.00
- 56.0 kbps	$71.29	$344.00
- 64.0 kbps	$71.29	$344.00

(B) Channel Mileage

(1) Channel Mileage Facility per Mile per Month		(2) Channel Mileage Facility Termination per Month	
2.4 kbps thru 64.0	N/A	2.4 kbps thru 64.0	N/A

(C) Optional Features and Functions		
(1) Bridging per port	$7.00	N/A
(2) Loop Transfer Arrangement	$5.54	N/A

(D) Channel Service Unit, Per Termination		
- 2.4 kbps	$27.67	N/A
- 4.8 kbps	$27.67	N/A
- 9.6 kbps	$27.67	N/A
- 56.0 kbps	$27.67	N/A

Pursuant to:
U-08-135(1)

Effective: November 21, 2008

Issued by: GCI Communication Corp.

By: Jennifer K.G. Robertson Title: Tariffs and Licenses Manager

RECEIVED
OCT 0 2 2009
STATE OF ALASKA
REGULATORY COMMISSION OF ALASKA

GCI COMMUNICATION CORP.

ACCESS SERVICES

23. Rates and Charges – Arctic Slope Area (Cont'd)
23.3 Special Access Service (Cont'd)

23.3.4 High Capacity Service
Regulations concerning High Capacity Service are set forth in 7.6 preceding.

(A) Channel Termination per Termination

	Monthly Rate	NRC	
- 1.544 Mbps	$1,093.40	$349.00	(R)
- 3.152 Mbps	ICB	ICB	
- 6.312 Mbps	ICB	ICB	
- 44.736 Mbps	ICB	ICB	
- 274.175 Mbps	ICB	ICB	

(B) Channel Mileage

(1) Channel Mileage Facility per Mile

- 1.544 Mbps	$17.88
- 3.152 Mbps	ICB
- 6.312 Mbps	ICB
- 44.736 Mbps	$123.09
- 274.175 Mbps	ICB

(2) Channel Mileage Termination per Termination

- 1.544 Mbps	$88.16
- 3.152 Mbps	ICB
- 6.312 Mbps	ICB
- 44.736 Mbps	$491.01
- 274.175 Mbps	ICB

Tariff Advice No. 531 Effective: November 16, 2009

Issued by: GCI Communication Corp.
By: Jennifer K.G. Robertson Title: Tariffs and Licenses Manager

RECEIVED
OCT 01 2008
STATE OF ALASKA
REGULATORY COMMISSION OF ALASKA

GCI COMMUNICATION CORP.

ACCESS SERVICES

23. Rates and Charges – Arctic Slope Area (Cont'd)
    23.3 Special Access Service (Cont'd)
        23.3.4 High Capacity Service (Cont'd)

(C) Optional Features and Functions	Monthly Rate	NRC
(1) Multiplexing, per arrangement		
- DS4 to DS1	ICB	N/A
- DS3 to DS1	$422.63	N/A
- DS2 to DS1	ICB	N/A
- DS1C to DS1	ICB	N/A
- DS1 to Voice*	$163.17	N/A
- DS1 to DS0	$163.17	N/A
- DS0 to twenty (20) 2.4 kbps	$347.50	N/A
- DS0 to ten (10) 4.8 kbps	$236.12	N/A
- DS0 to five (5) 9.6 kbps	$209.39	N/A
(2) Automatic Loop Transfer per arrangement**	$140.78	N/A
(3) Transfer Arrangement, 4 port	$153.44	
(4) Synchronization	None	

* A channel of this DS1 to the Hub can be used for Digital Data service.
** An additional Channel Termination charge will apply whenever the spare line is provided as a leg to the customer designated premises.

(D) Network Channel Terminating Equipment (NCTE),

(1) Per Termination – 1.544 Mbps	$79.84	N/A
(2) Per Termination – Automatic Loop Transfer	$320.77	N/A

Pursuant to: U-08-135(1)

Effective: November 21, 2008

Issued by: GCI Communication Corp.

By: Jennifer K.G. Robertson

Title: Tariffs and Licenses Manager

RECEIVED

APR 11 2014

STATE OF ALASKA
REGULATORY COMMISSION OF ALASKA

GCI COMMUNICATION CORP.

ACCESS SERVICES

23. Rates and Charges – Arctic Slope Area (Cont'd)

23.4 Additional Engineering, Labor and Miscellaneous Service – Special Access (T)
Regulations Concerning Additional Engineering, Additional labor and Miscellaneous Services are set forth in 9 preceding.

23.4.1 The Charges for Additional Engineering:

(A) Basic Time, normally scheduled working hours per engineer (each half hour or fraction thereof) $23.80

(B) Overtime, outside of normally scheduled working hours per engineer (each half hour or fraction thereof) $35.71

(C) Premium Time, outside of scheduled work day per engineer (each half hour or fraction thereof) $47.61

23.4.2 The charges for Additional Labor:

(A) Installation and Repair

(1) Overtime, outside of normally scheduled working hours on a scheduled work day, per technician (each half hour or fraction thereof*) $29.34
(2) Premium Time, outside of normally scheduled working day, per technician (each half hour or fraction thereof*) $39.12

*A call-out of a Company employee at a time not consecutive with the employee's scheduled working period is subject to a minimum charge of four hours.

Pursuant to U-13-134(7) Effective: July 1, 2013

Issued by: GCI Communication Corp.

By: Cheryl Treuer for Cindy Hall Title: Tariffs and Licenses Manager

RECEIVED
OCT 01 2008
STATE OF ALASKA
REGULATORY COMMISSION OF ALASKA

GCI COMMUNICATION CORP.

ACCESS SERVICES

23. Rates and Charges – Arctic Slope Area (Cont'd)
    23.4 Additional Engineering, Additional Labor and Miscellaneous Service (Cont'd)
        23.4.2 The charges for Additional Labor (Cont'd)

(B) Standby

(1) Basic Time, normally scheduled working hours, per technician (each half hour or fraction thereof*)	$18.16
(2) Overtime, outside of normally scheduled working hours on a scheduled work day, per technician (each half hour or fraction thereof*)	$27.24
(3) Premium time, outside of scheduled working day, per technician (each half hour or fraction thereof*)	$36.32

*A call-out of a Company employee at a time not consecutive with the employee's scheduled working period is subject to a minimum charge of four hours.

Pursuant to:
U-08-135(1)

Effective: November 21, 2008

Issued by: GCI Communication Corp.

By: Jennifer K.G. Robertson

Title: Tariffs and Licenses Manager

RCA No. 489 Original Sheet No. 349

Canceling

Sheet No.

RECEIVED
OCT 01 2008
STATE OF ALASKA
REGULATORY COMMISSION OF ALASKA

GCI COMMUNICATION CORP.

ACCESS SERVICES

23. Rates and Charges – Arctic Slope Area (Cont'd)
    23.3 Special Access Service (Cont'd)
        23.4.2 The Charges for Additional Labor (Cont'd)

(C) Testing and Maintenance with other telephone companies, or other labor.

(1) Installation and Repair

Basic Time - normally scheduled working hours, per technician (each half hour or fraction thereof*) $19.56

Overtime - outside of normally scheduled working hours on a scheduled work day, per technician (each half hour or fraction thereof*) $29.34

Premium Time - outside of scheduled work day per technician (each half hour of fraction thereof*) $39.12

(2) Central Office Maintenance

Basic Time - normally scheduled working hours, per technician (each half hour or fraction thereof*) $21.19

Overtime - outside of normally scheduled working hours on a scheduled work day, per technician (each half hour or fraction thereof*) $31.79

Premium Time - outside of scheduled work day per technician (each half hour of fraction thereof*) $42.39

*A call-out of a Company employee at a time not consecutive with the employee's scheduled working period is subject to a minimum charge of four hours.

Pursuant to: U-08-135(1)

Effective: November 21, 2008

Issued by: GCI Communication Corp.

By: Jennifer K.G. Robertson

Title: Tariffs and Licenses Manager

RCA No. 489 Original Sheet No. 349.1

Canceling

Sheet No.

RECEIVED
APR 11 2014
STATE OF ALASKA
REGULATORY COMMISSION OF ALASKA

GCI COMMUNICATION CORP.

ACCESS SERVICES

23. Rates and Charges – Arctic Slope Area (Cont'd)

23.5 Additional Engineering, Labor and Miscellaneous Service – Switched Access
Regulations Concerning Additional Engineering, Additional labor and Miscellaneous Services are set forth in 9 preceding. Each Half Hour, or Fraction Thereof.

23.5.1 The Charges for Engineering:	
(A) Basic Time, per engineer	$31.03
(B) Overtime, per engineer	$46.55
(C) Premium Time, per engineer	$62.06
23.5.2 Additional Labor Periods:*	
(A) Installation and Repair	
(1) Overtime, per technician	$47.57*
(2) Overtime, per technician	$63.42*
(B) Standby	
(1) Basic Time, per technician	$21.18*
(2) Overtime, per technician	$31.77*
(3) Premium Time, per technician	$42.36*
(C) Testing and Maintenance, Installation and Repair	
(1) Basic Time, per technician	$31.71
(2) Overtime, per technician	$47.57*
(3) Premium Time, per technician	$63.42*
(D) Central Office Maintenance, Technician	
(1) Basic Time, per technician	$34.66
(2) Overtime, per technician	$51.99*
(3) Premium Time, per technician	$69.32*

*A call-out of a Company employee at a time not consecutive with the employee's scheduled working period is subject to a minimum charge of four hours.

Pursuant to U-13-134(7) Effective: July 1, 2013

Issued by: GCI Communication Corp.

By: Phil Pierce for Cindy Hall Title: Tariffs and Licenses Manager

RECEIVED
DEC 21 2018
STATE OF ALASKA
REGULATORY COMMISSION OF ALASKA

GCI COMMUNICATION CORP.

ACCESS SERVICES

24. Rates and Charges – Cordova Area

24.1 Line Charges

a. Carrier Common Line (CCL) Rate

This charge is billed to AUSAC as described in section 3.7 preceding. (N) (D)

b. Network Access Fee (NAF) Rate

The total RCA NAF Rate is $5.75 per line per month.

RECEIVED
JUL 27 2017
STATE OF ALASKA
REGULATORY COMMISSION OF ALASKA

GCI COMMUNICATION CORP.

ACCESS SERVICES

24. Rates and Charges – Cordova Area (Cont'd)

24.2 Switched Access Service

24.2.1 Nonrecurring Charges

	Rate	Reference	
(A) Access Order	$86.00	5.2	
(B) Service Date Change Charge	$60.00	5.8	
(C) Design Change Charge	$84.00	5.8	
(D) Miscellaneous Service Order Charge	$123.00	5.8	
(E) Entrance Facility Installation – DS1	$684.81		
Entrance Facility Installation – DS3*	$923.46		
Trunk Activation Per Order	$952.48		(I)
(F) Interim NXX Translation Per Order	$456.54	6.8	
(G) Telecommunications Service Priority Charge Per Circuit	$54.63	9.3	

* Where facilities are available.

Pursuant to: TA586-489 Effective: July 01, 2017

Issued by: GCI Communication Corp.

By: Cynthia L. Hall Title: Tariffs and Licenses Manager

INFORMATIONAL FILING ONLY

RECEIVED 06/24/21

GCI COMMUNICATION CORP.

ACCESS SERVICES

24. Rates and Charges – Cordova Area (Cont'd)
24.2 Switched Access Service (Cont'd)

24.2.2 Recurring Charges

	Rate	Reference	
(A) Common Transport Per Minutes of Use - Orig Toll	N/A	6.8	(C)
Terminating Tandem Switching	$0.00000		(R)
Joint Tandem Switched Transport – Orig Toll Free	N/A		(N)
(B) Entrance Facility, per termination – DS1	$771.24		
Entrance Facility, per termination – DS3*	$7,041.95		
Direct Trunked Transport:			
Direct Trunked Termination – DS1	$274.15		
Direct Trunked Termination – DS3*	$1,760.45		
Direct Trunked Facility – DS1	$52.84		
Direct Trunked Facility – DS3*	$460.28		
(C) Multiplexing, per arrangement – DS3 to DS1*	$1,606.33		
Multiplexing, per arrangement –DS1 to Voice	$620.15		
(D) Local Switching (Per Minutes of Use) – Orig Toll	$0.00	6.8	(C)
Local Switching (Per Minutes of Use) – Originating Toll Free	$0.00	6.8	(N) (D)
(E) Information Surcharge Per 100 Minutes – Orig Toll	$0.00	6.8	(C)
Information Surcharge Per 100 Minutes – Originating Toll Free	$0.00	6.8	(N) (D)

* Where facilities are available.

RECEIVED
JUN 29 2022
STATE OF ALASKA
REGULATORY COMMISSION OF ALASKA

GCI COMMUNICATION CORP.

ACCESS SERVICES

24. Rates and Charges – Cordova Area (Cont'd)
24.2 Switched Access Service (Cont'd)
24.2.2 Recurring Charges (Cont'd)

	Rate	Reference	
(F) TSP Database Charge Per Circuit	$1.00	9.3	
(G) Toll Free Database Access Service Queries		6.8	
a. Basic per Query	$0.002224		(R)
24.2.3 Equal Access Recovery Charge Monthly Rate per Presubscribed Equal Access Line	N/A	6.8	
24.2.4 Presubscription Change Charge Submitted using manual methods	$5.50	9.3	
Submitted using manual methods when both the interLATA PIC and intraLATA PIC selections are changed simultaneously	$2.75	9.3	

24.2.5 Assumed Minutes of Use	Assumed Minutes Per Month	Tariff Section Reference
(A) Feature Group A, Two Way Calling (1510 Originating, 2685 Terminating)	4195	6.8
(B) Feature Group A, Originating Only	1510	6.8
(C) Feature Group A, Terminating Only	2685	6.8
(D) Feature Group B, Two Way Calling (3132 Originating, 5568 Terminating)	8700	6.8
(E) Feature Group B, Originating Only	3132	6.8
(F) Feature Group B, Terminating Only	5568	6.8

RECEIVED
AUG 0 3 2010
STATE OF ALASKA
REGULATORY COMMISSION OF ALASKA

GCI COMMUNICATION CORP.

ACCESS SERVICES

24. Rates and Charges – Cordova Area (Cont'd)

24.3 Special Access Service

Regulations concerning charges associated with Surcharge for Special Access Service are set forth in 7.3 preceding.

24.3.1a Surcharge Monthly Rate $25.00

24.3.1b Telecommunications Service Priority Charge
Regulations concerning charges associated with Surcharge for Miscellaneous Service are set forth in 9.3 preceding.

Monthly	NRC
$1.00	$55.00

24.3.1c Special Access Ordering
Regulations concerning charges associated with Access Ordering are set forth in 5.2 and 5.8 preceding

(A) Access Order Charge Per Order $130.00

(B) Service Date Change Charge $35.00
Service Date Change Charge will apply, on a per order per occurrence basis, for each service date changed. The Access Order Charge as specified in 143.1c(A) preceding does not apply.

(C) Design Change Charge $35.00
The Design Change Charge will apply on a per order per occurrence basis, for each order requiring design change.

(D) Miscellaneous Service Order Charge $35.00

Tariff Advice No. 543 Effective: September 10, 2010

Issued by: GCI Communication Corp.

By: Cynthia L. Lynch Title: Tariffs and Licenses Manager

RECEIVED
AUG 03 2010
STATE OF ALASKA
REGULATORY COMMISSION OF ALASKA

GCI COMMUNICATION CORP.

ACCESS SERVICES

24. Rates and Charges – Cordova Area (Cont'd)
24.3 Special Access Service (Cont'd)

24.3.2 Voice Grade Service
Regulations concerning Voice Grade are set forth in 7.4 preceding.

(A) Channel Termination Per Termination	Monthly Rate	NRC
Two-Wire	$285.85	$289.00
Four-Wire	$457.40	$289.00

(B) Channel Mileage

(1) Channel Mileage Facility per Mile	
Two-Wire	N/A
Four-Wire	N/A
(2) Channel Mileage Termination per Term	
Two-Wire	N/A
Four-Wire	N/A

RECEIVED
AUG 0 3 2010
STATE OF ALASKA
REGULATORY COMMISSION OF ALASKA

GCI COMMUNICATION CORP.

ACCESS SERVICES

24. Rates and Charges – Cordova Area (Cont'd)
24.3 Special Access Service (Cont'd)
24.3.2 Voice Grade Service (Cont'd)

(C) Optional Features and Functions	Monthly Rate	NRC
(1) Bridging		
(A) Voice Bridging per Port		
Two-Wire	$5.58	N/A
Four-Wire	$5.58	N/A
(B) Data Bridging per Port		
Two-Wire	$5.58	N/A
Four-Wire	$5.58	N/A
(C) Telephoto Bridging, Per Port		
Two-Wire	$5.58	N/A
Four-Wire	$5.58	N/A

RECEIVED
AUG 0 3 2010
STATE OF ALASKA
REGULATORY COMMISSION OF ALASKA

GCI COMMUNICATION CORP.

ACCESS SERVICES

24. Rates and Charges – Cordova Area (Cont'd)
24.3 Special Access Service (Cont'd)
24.3.2 Voice Grade Service (Cont'd)
Regulations concerning Voice Grade are set forth in 7.4 preceding.

(C) Optional Features and Functions (cont'd)	Monthly Rate	NRC
(1) Bridging (cont'd)		
(D) Dataphone Select-A-Station:		
1. Sequential Arrangement, Ports per Channel Connected		
Two-Wire	$19.04	N/A
Four-Wire	$100.99	N/A
2. Addressable Arrangement, Ports per Channel Connected		
Two-Wire	$20.38	N/A
Four-Wire	$88.20	N/A
(E) Telemetry and Alarm Bridging, per Channel Connected		
Split Band	$7.63	N/A
Summation	$2.98	N/A
Passive Bridging	$0.21	N/A

Issued by: GCI Communication Corp.
By: Cynthia L Lynch Title: Tariffs and Licenses Manager

RCA No. 489 Original Sheet No. 358

Canceling

Sheet No.

RECEIVED
AUG 03 2010
STATE OF ALASKA
REGULATORY COMMISSION OF ALASKA

GCI COMMUNICATION CORP.

ACCESS SERVICES

24. Rates and Charges – Cordova Area (Cont'd)
24.3 Special Access Service (Cont'd)
24.3.2 Voice Grade Service (Cont'd)
(C) Optional Features and Functions (Cont'd)

	Monthly Rate	NRC
(2) Conditioning per Termination		
- C-Type	$6.18	N/A
- Improved Attenuation Distortion	N/A	N/A
- Improved Envelope Delay Distortion	N/A	N/A
- Data Capability	$4.25	N/A
- Telephoto Capability	$7.74	N/A
- Sealing Current	N/A	N/A
(3) Improved Return Loss per Termination		
- Effective Two-Wire	$10.98	N/A
- Effective Four-Wire	$10.98	N/A
(4) Customer Specified Receive Level per Two-Wire Termination	$7.55	N/A
(5) Multiplexing, per Arrangement Voice to Telegraph Grade	$194.07	N/A

Tariff Advice No. 543 Effective: September 10, 2010

Issued by: GCI Communication Corp.
By: Cynthia L Lynch Title: Tariffs and Licenses Manager

RCA No. 489 Original Sheet No. 359

Canceling

Sheet No.

RECEIVED
AUG 03 2010
STATE OF ALASKA
REGULATORY COMMISSION OF ALASKA

GCI COMMUNICATION CORP.

ACCESS SERVICES

24. Rates and Charges – Cordova Area (Cont'd)
24.3 Special Access Service (Cont'd)
24.3.2 Voice Grade Service (Cont'd)
(C) Optional Features and Functions (Cont'd)

	Monthly Rate	NRC
(6) Signaling Capability per Termination	$11.11	N/A
(7) Selective Signaling Arrangement, per Arrangement	$5.58	N/A
(8) Transfer Arrangement		
4 Port	$2.69	N/A
5 Port	$6.13	N/A

Tariff Advice No. 543 Effective: September 10, 2010

Issued by: GCI Communication Corp.
By: Cynthia L Lynch Title: Tariffs and Licenses Manager

RECEIVED
AUG 03 2010
STATE OF ALASKA
REGULATORY COMMISSION OF ALASKA

GCI COMMUNICATION CORP.

ACCESS SERVICES

24. Rates and Charges – Cordova Area (Cont'd)
24.3 Special Access Service (Cont'd)

24.3.3 Digital Data Service

Regulations concerning Digital Data Service are set forth in 7.5 preceding.

(A) Channel Termination per Termination	Monthly Rate	NRC
- 2.4 kbps	$293.50	$288.00
- 4.8 kbps	$293.50	$288.00
- 9.6 kbps	$293.50	$288.00
- 19.2 kbps	$293.50	$288.00
- 56.0 kbps	$293.50	$288.00
- 64.0 kbps	$293.50	$288.00

(B) Channel Mileage Facility Per Mile	Rate	NRC
- 2.4 kbps	N/A	N/A
- 4.8 kbps	N/A	N/A
- 9.6 kbps	N/A	N/A
- 19.2 kbps	N/A	N/A
- 56.0 kbps	N/A	N/A
- 64.0 kbps	N/A	N/A

(C) Channel Mileage Termination per Termination	Rate	NRC
- 2.4 kbps	N/A	N/A
- 4.8 kbps	N/A	N/A
- 9.6 kbps	N/A	N/A
- 19.2 kbps	N/A	N/A
- 56.0 kbps	N/A	N/A
- 64.0 kbps	N/A	N/A

RECEIVED
AUG 03 2010
STATE OF ALASKA
REGULATORY COMMISSION OF ALASKA

GCI COMMUNICATION CORP.

ACCESS SERVICES

24. Rates and Charges – Cordova Area (Cont'd)
24.3 Special Access Service (Cont'd)

24.3.3 Digital Data Service (Cont'd)

Regulations concerning Digital Data Service are set forth in 7.5 preceding.

	Monthly Rate	NRC
(C) Optional Features and Functions		
(1) Bridging per port	$6.74	N/A
(2) Loop Transfer Arrangement Per 4 Port Arrangement	$5.33	N/A
(D) Channel Service Unit, Per Termination		
- 2.4 kbps	$26.64	N/A
- 4.8 kbps	$26.64	N/A
- 9.6 kbps	$26.64	N/A
- 56.0 kbps	$26.64	N/A

RECEIVED
AUG 03 2010
STATE OF ALASKA
REGULATORY COMMISSION OF ALASKA

GCI COMMUNICATION CORP.

ACCESS SERVICES

24. Rates and Charges – Cordova Area (Cont'd)
24.3 Special Access Service (Cont'd)

24.3.4 High Capacity Service
Regulations concerning High Capacity Service are set forth in 7.6 preceding.

(A) Channel Termination per Termination	Monthly Rate	NRC
- 1.544 Mbps	$681.15	$281.00
- 3.152 Mbps	ICB	ICB
- 6.312 Mbps	ICB	ICB
- 44.736 Mbps	ICB	ICB
- 274.175 Mbps	ICB	ICB

(B) Channel Mileage

(1) Channel Mileage Facility per Mile	
- 1.544 Mbps	$17.22
- 3.152 Mbps	ICB
- 6.312 Mbps	ICB
- 44.736 Mbps	$118.53
- 274.175 Mbps	ICB
Non-Recurring Charge	N/A

(2) Channel Mileage Termination per Termination	
- 1.544 Mbps	$84.89
- 3.152 Mbps	ICB
- 6.312 Mbps	ICB
- 44.736 Mbps	$472.81
- 274.175 Mbps	ICB
Non-Recurring Charge	N/A

RECEIVED
AUG 0 3 2010
STATE OF ALASKA
REGULATORY COMMISSION OF ALASKA

GCI COMMUNICATION CORP.

ACCESS SERVICES

24. Rates and Charges – Cordova Area (Cont'd)
    24.3 Special Access Service (Cont'd)
        24.3.4 High Capacity Service (Cont'd)

(C) Optional Features and Functions	Monthly Rate	NRC
(1) Multiplexing, per arrangement		
- DS4 to DS1	ICB	N/A
- DS3 to DS1	$406.96	N/A
- DS2 to DS1	ICB	N/A
- DS1C to DS1	ICB	N/A
- DS1 to Voice*	$157.12	N/A
- DS1 to DS0	$157.12	N/A
- DS0 to twenty (20) 2.4 kbps	$334.62	N/A
- DS0 to ten (10) 4.8 kbps	$227.37	N/A
- DS0 to five (5) 9.6 kbps	$201.63	N/A
(2) Automatic Loop Transfer per arrangement**	$135.56	N/A
(3) Transfer Arrangement, 4 port	$147.75	
(4) Synchronization	None	

* A channel of this DS1 to the Hub can be used for Digital Data service.
** An additional Channel Termination charge will apply whenever the spare line is provided as a leg to the customer designated premises.

RECEIVED
AUG 0 3 2010
STATE OF ALASKA
REGULATORY COMMISSION OF ALASKA

GCI COMMUNICATION CORP.

ACCESS SERVICES

24. Rates and Charges – Cordova Area (Cont'd)
    24.3 Special Access Service (Cont'd)
        24.3.4 High Capacity Service (Cont'd)

(D) Network Channel Terminating Equipment (NCTE),

(1) 1.544 Mbps – Per Termination	$76.88	N/A
(2) Automatic Loop Transfer – Per Termination	$308.88	N/A

RECEIVED

APR 11 2014

STATE OF ALASKA
REGULATORY COMMISSION OF ALASKA

GCI COMMUNICATION CORP.

ACCESS SERVICES

24. Rates and Charges – Cordova Area (Cont'd)

24.4 Additional Engineering, Labor and Miscellaneous Service – Special Access (T)
Regulations Concerning Additional Engineering, Additional labor and Miscellaneous Services are set forth in 9 preceding.

24.4.1 The Charges for Additional Engineering:

(A) Basic Time, normally scheduled working hours per engineer (each half hour or fraction thereof) $23.80

(B) Overtime, outside of normally scheduled working hours per engineer (each half hour or fraction thereof) $35.71

(C) Premium Time, outside of scheduled work day per engineer (each half hour or fraction thereof) $47.61

24.4.2 The charges for Additional Labor:

(A) Installation and Repair

(1) Overtime, outside of normally scheduled working hours on a scheduled work day, per technician (each half hour or fraction thereof*) $29.34
(2) Premium Time, outside of normally scheduled working day, per technician (each half hour or fraction thereof*) $39.12

*A call-out of a Company employee at a time not consecutive with the employee's scheduled working period is subject to a minimum charge of four hours.

Pursuant to U-13-134(7) Effective: July 1, 2013

Issued by: GCI Communication Corp.

By: Philip Penn for Cindy Hall Title: Tariffs and Licenses Manager

RECEIVED
AUG 0 3 2010
STATE OF ALASKA
REGULATORY COMMISSION OF ALASKA

GCI COMMUNICATION CORP.

ACCESS SERVICES

24. Rates and Charges – Cordova Area (Cont'd)
    24.4 Additional Engineering, Additional Labor and Miscellaneous Service (Cont'd)
        24.4.2 The charges for Additional Labor (Cont'd)

(B) Standby

(1) Basic Time, normally scheduled working hours, per technician (each half hour or fraction thereof*)	$18.16
(2) Overtime, outside of normally scheduled working hours on a scheduled work day, per technician (each half hour or fraction thereof*)	$27.24
(3) Premium time, outside of scheduled working day, per technician (each half hour or fraction thereof*)	$36.32

*A call-out of a Company employee at a time not consecutive with the employee's scheduled working period is subject to a minimum charge of four hours.

Tariff Advice No. 543 Effective: September 10, 2010

Issued by: GCI Communication Corp.

By: Cynthia L Lynch Title: Tariffs and Licenses Manager

RECEIVED
AUG 0 3 2010
STATE OF ALASKA
REGULATORY COMMISSION OF ALASKA

GCI COMMUNICATION CORP.

ACCESS SERVICES

24. Rates and Charges – Cordova Area (Cont'd)
    24.3 Special Access Service (Cont'd)
        24.4.2 The Charges for Additional Labor (Cont'd)

(C) Testing and Maintenance with Other Telephone Companies, or Other Labor.

(1) Installation and Repair

Basic Time - normally scheduled working hours, per technician (each half hour or fraction thereof*) $19.56

Overtime - outside of normally scheduled working hours on a scheduled work day, per technician (each half hour or fraction thereof*) $29.34

Premium Time - outside of scheduled work day per technician (each half hour of fraction thereof*) $43.86

(2) Central Office Maintenance

Basic Time - normally scheduled working hours, per technician (each half hour or fraction thereof*) $21.19

Overtime - outside of normally scheduled working hours on a scheduled work day, per technician (each half hour or fraction thereof*) $31.79

Premium Time - outside of scheduled work day per technician (each half hour of fraction thereof*) $42.39

*A call-out of a Company employee at a time not consecutive with the employee's scheduled working period is subject to a minimum charge of four hours.

Tariff Advice No. 543 Effective: September 10, 2010

Issued by: GCI Communication Corp.

By: Cynthia L Lynch Title: Tariffs and Licenses Manager

RCA No. 489 Original Sheet No. 367.1

Canceling

Sheet No.

RECEIVED
APR 11 2014
STATE OF ALASKA
REGULATORY COMMISSION OF ALASKA

GCI COMMUNICATION CORP.

ACCESS SERVICES

24. Rates and Charges – Cordova (Cont'd)

24.5 Additional Engineering, Labor and Miscellaneous Service – Switched Access
Regulations Concerning Additional Engineering, Additional labor and Miscellaneous Services are set forth in 9 preceding. Each Half Hour, or Fraction Thereof.

24.5.1 The Charges for Engineering:	
(A) Basic Time, per engineer	$31.03
(B) Overtime, per engineer	$46.55
(C) Premium Time, per engineer	$62.06
24.5.2 Additional Labor Periods:*	
(A) Installation and Repair	
(1) Overtime, per technician	$47.57*
(2) Overtime, per technician	$63.42*
(B) Standby	
(1) Basic Time, per technician	$21.18*
(2) Overtime, per technician	$31.77*
(3) Premium Time, per technician	$42.36*
(C) Testing and Maintenance, Installation and Repair	
(1) Basic Time, per technician	$31.71
(2) Overtime, per technician	$47.57*
(3) Premium Time, per technician	$63.42*
(D) Central Office Maintenance, Technician	
(1) Basic Time, per technician	$34.66
(2) Overtime, per technician	$51.99*
(3) Premium Time, per technician	$69.32*

*A call-out of a Company employee at a time not consecutive with the employee's scheduled working period is subject to a minimum charge of four hours.

Pursuant to U-13-134(7) Effective: July 1, 2013

Issued by: GCI Communication Corp.

By: Philip Theve for Cindy Hall Title: Tariffs and Licenses Manager